1982 Volvo

DL, GL, GLE, GLT TURBO & DL & GL DIESELS

ENGINE COMPARTMENT

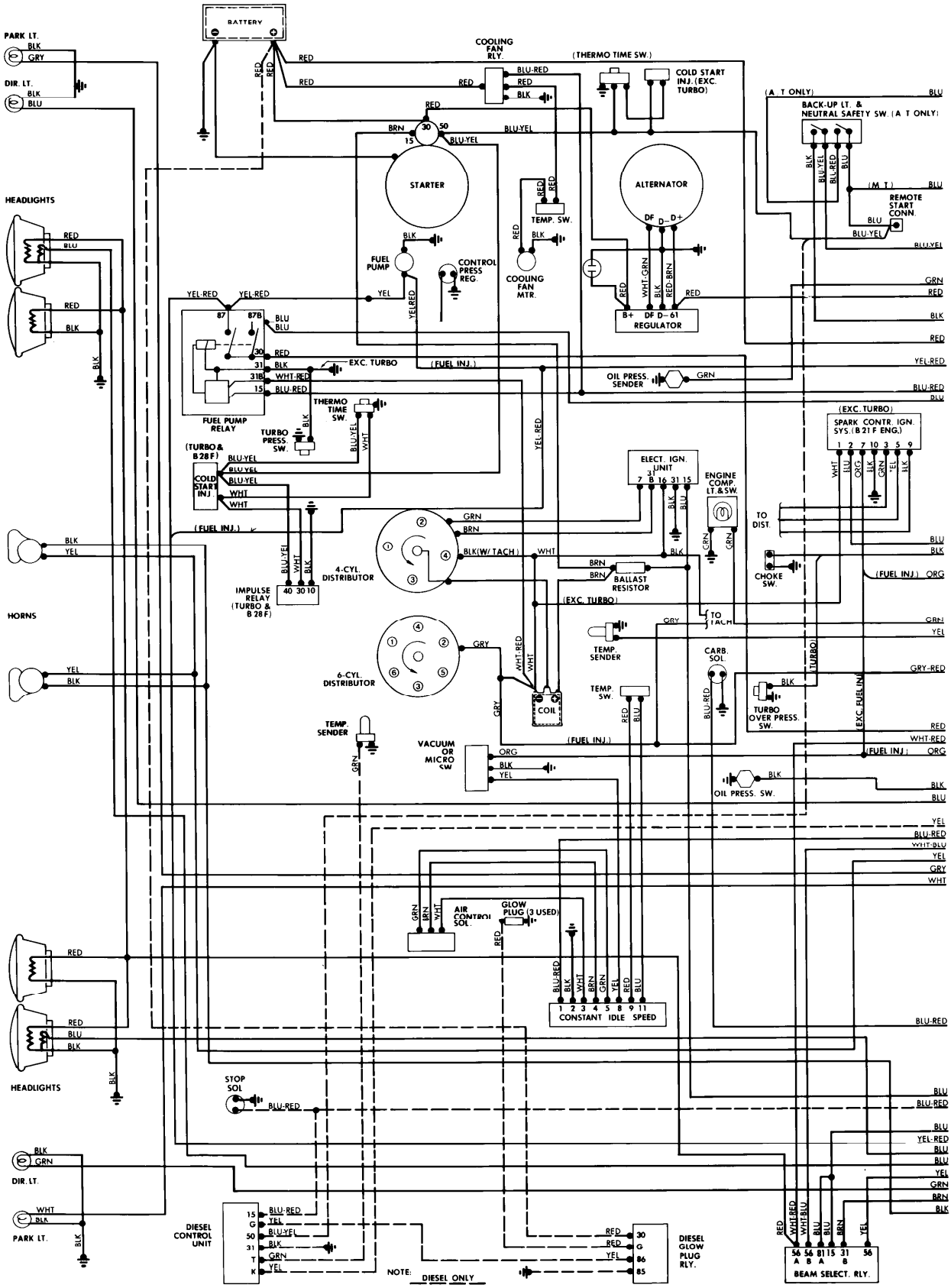

Copyright (c) 2001 Mitchell Repair Information Company

1982 Volvo

DL, GL, GLE, GLT TURBO & DL & GL DIESELS (Cont.)

FUSE BLOCK & UNDERDASH

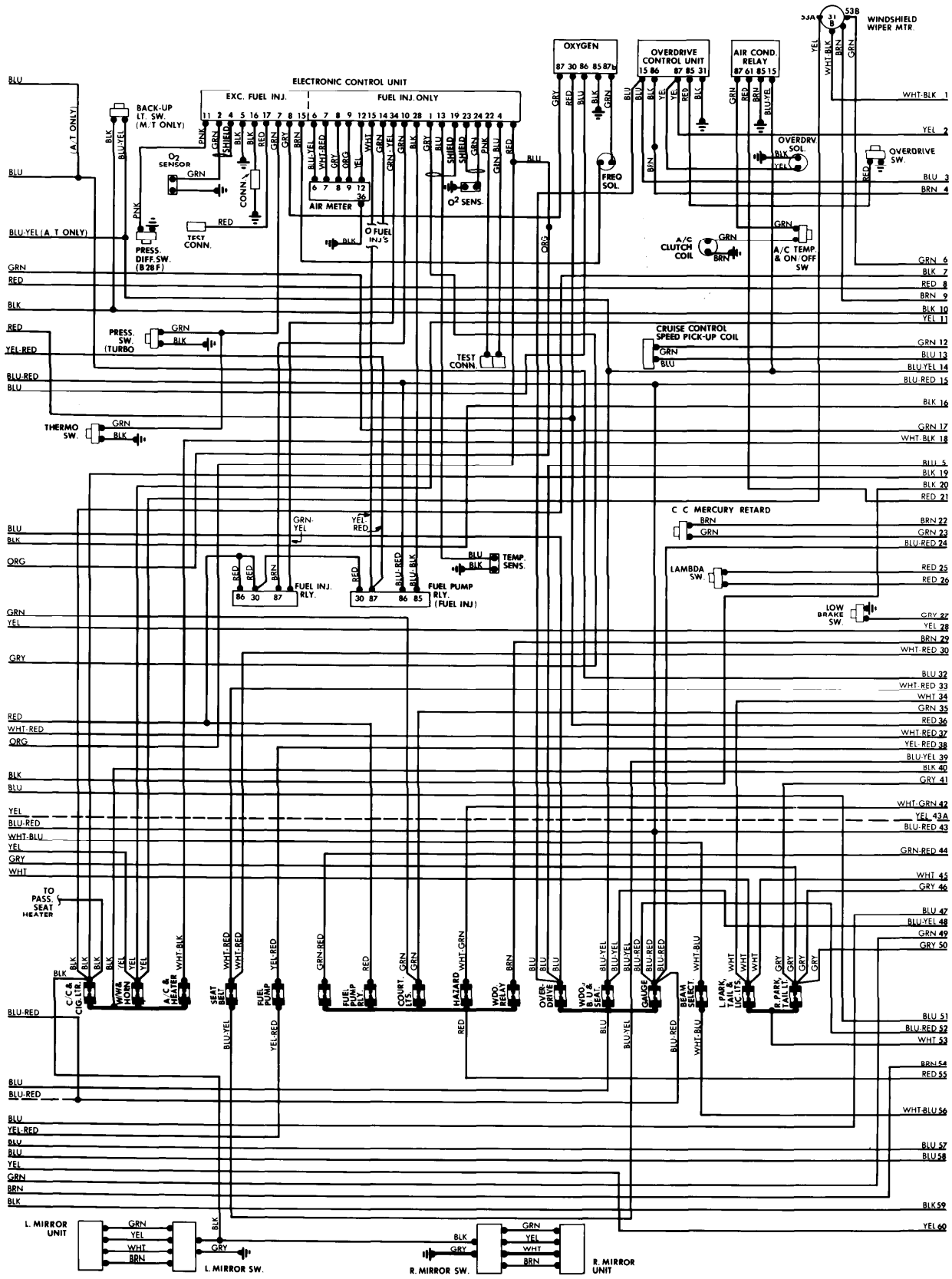

Copyright (c) 2001 Mitchell Repair Information Company

1982 Volvo

DL, GL, GLE, GLT TURBO & DL & GL DIESELS (Cont.)

INSTRUMENT PANEL & UNDERDASH

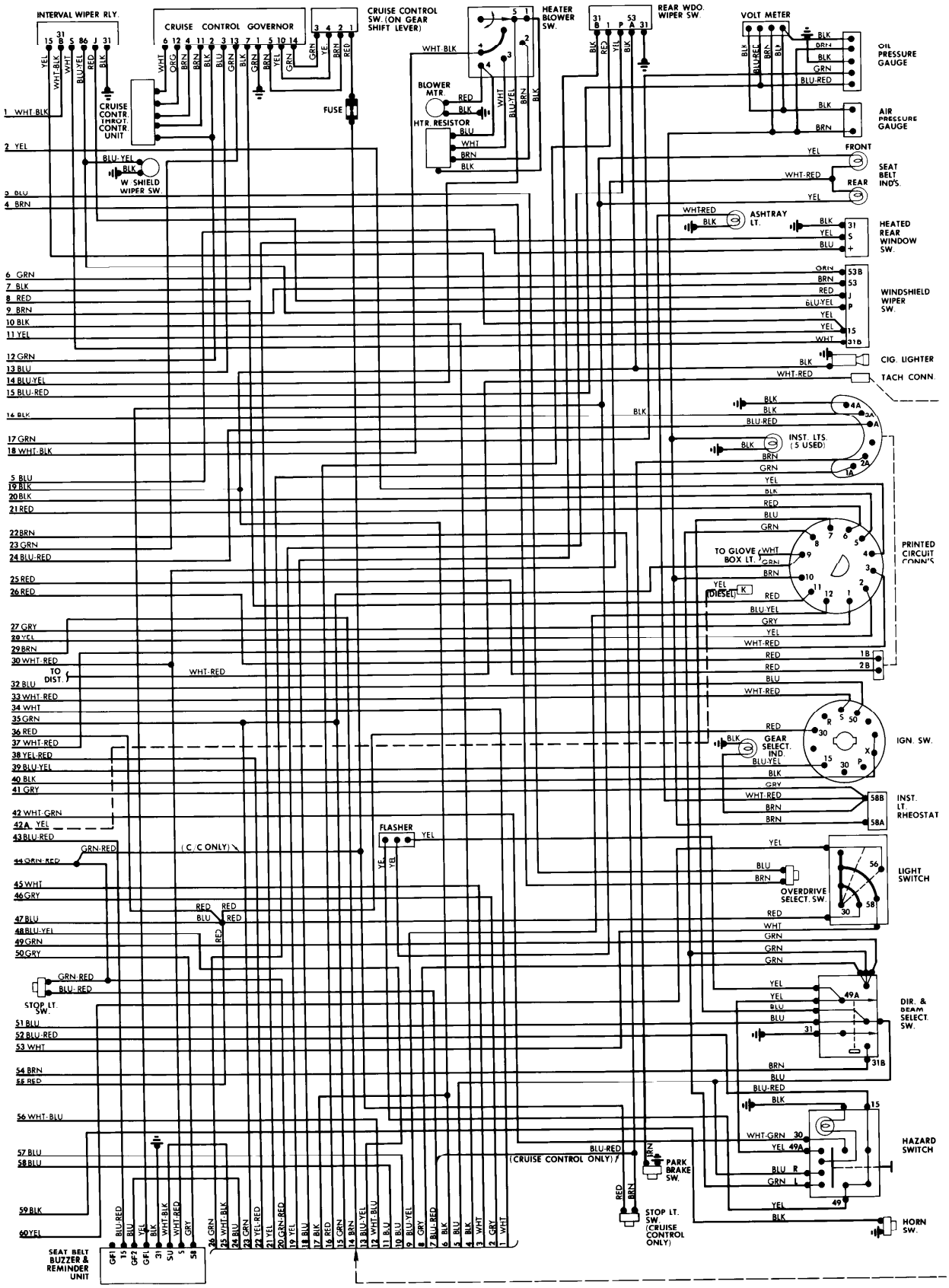

Copyright (c) 2001 Mitchell Repair Information Company

1982 Volvo

DL, GL, GLE, GLT TURBO & DL & GL DIESELS (Cont.)

REAR COMPARTMENT & ACCESSORIES

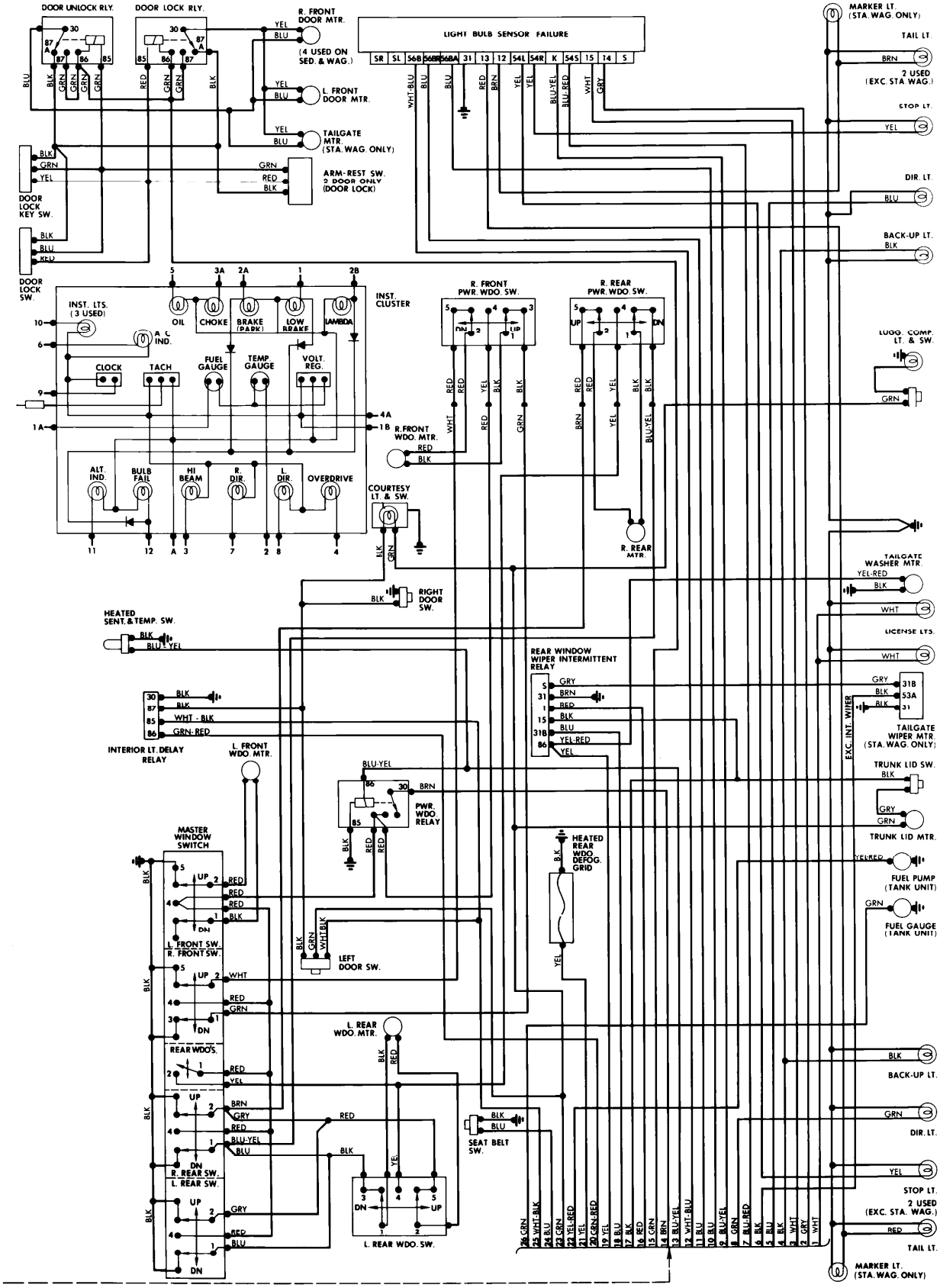

Copyright (c) 2001 Mitchell Repair Information Company