1982 Toyota

STARLET

ENGINE COMPARTMENT, FUSE BLOCK & UNDERDASH

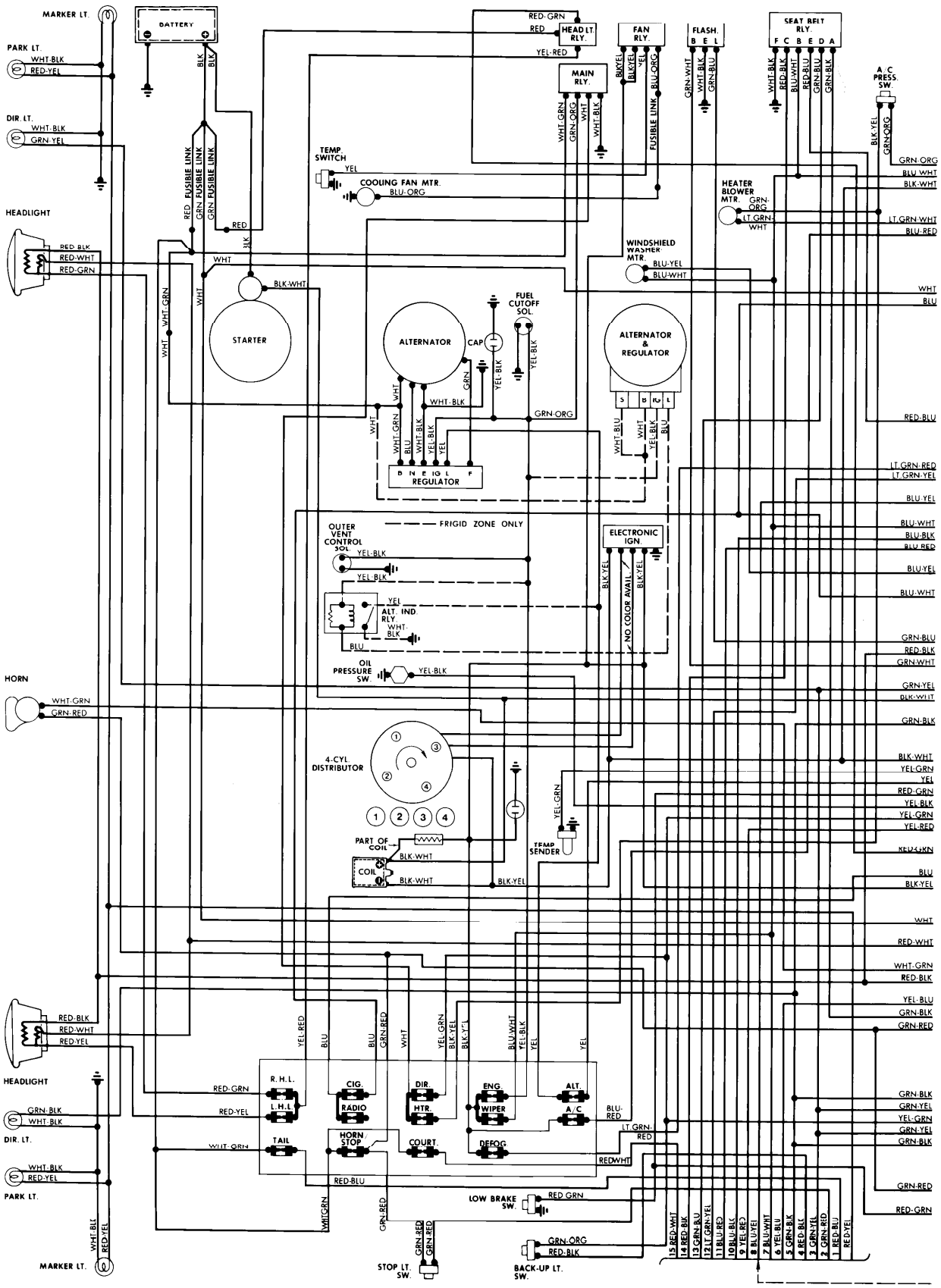

Copyright (c) 2001 Mitchell Repair Information Company

1982 Toyota

STARLET (Cont.)

INSTRUMENT PANEL & REAR COMPARTMENT

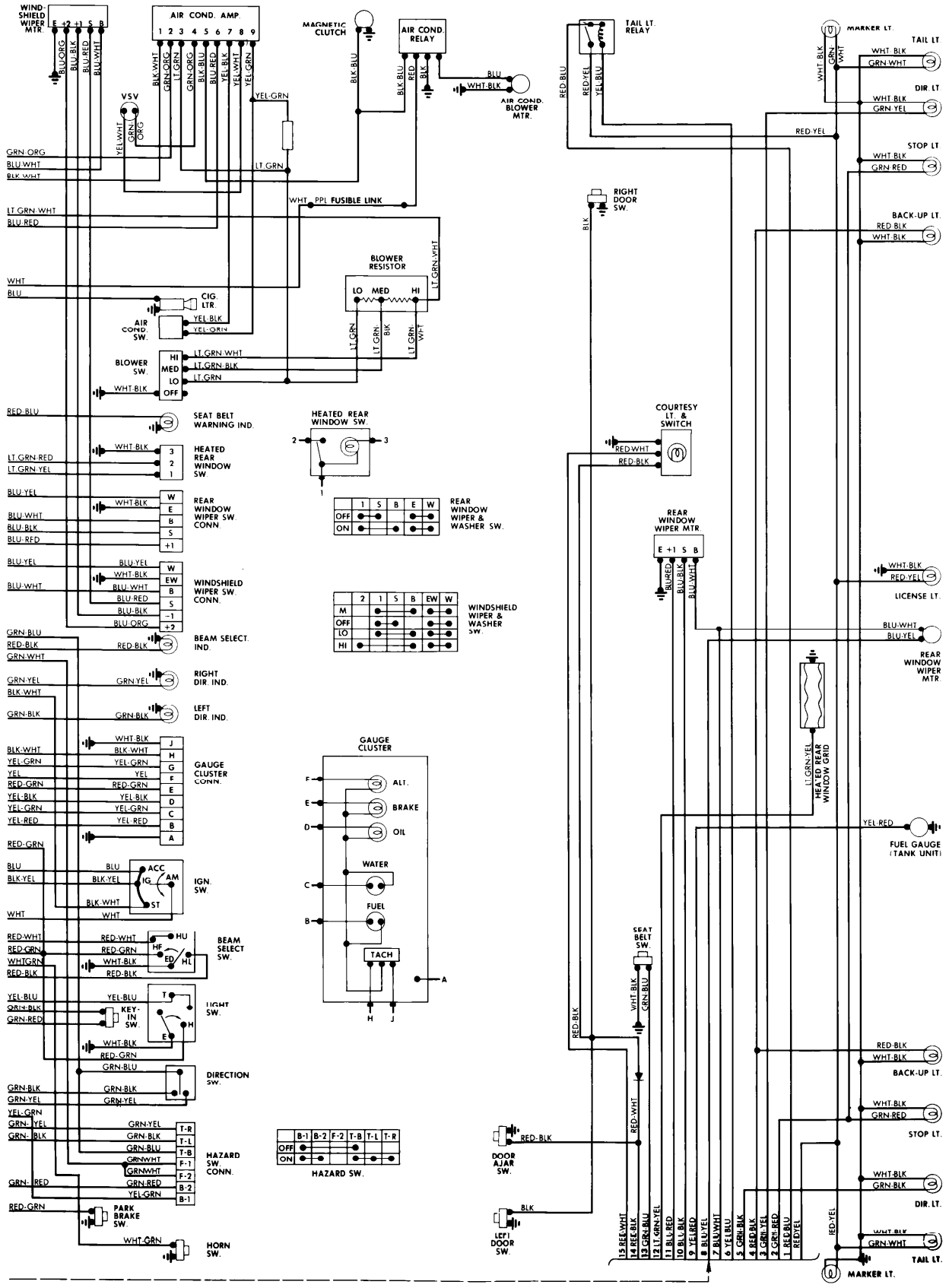

Copyright (c) 2001 Mitchell Repair Information Company