1982 Datsun/Nissan

MAXIMA & MAXIMA DIESEL

ENGINE COMPARTMENT

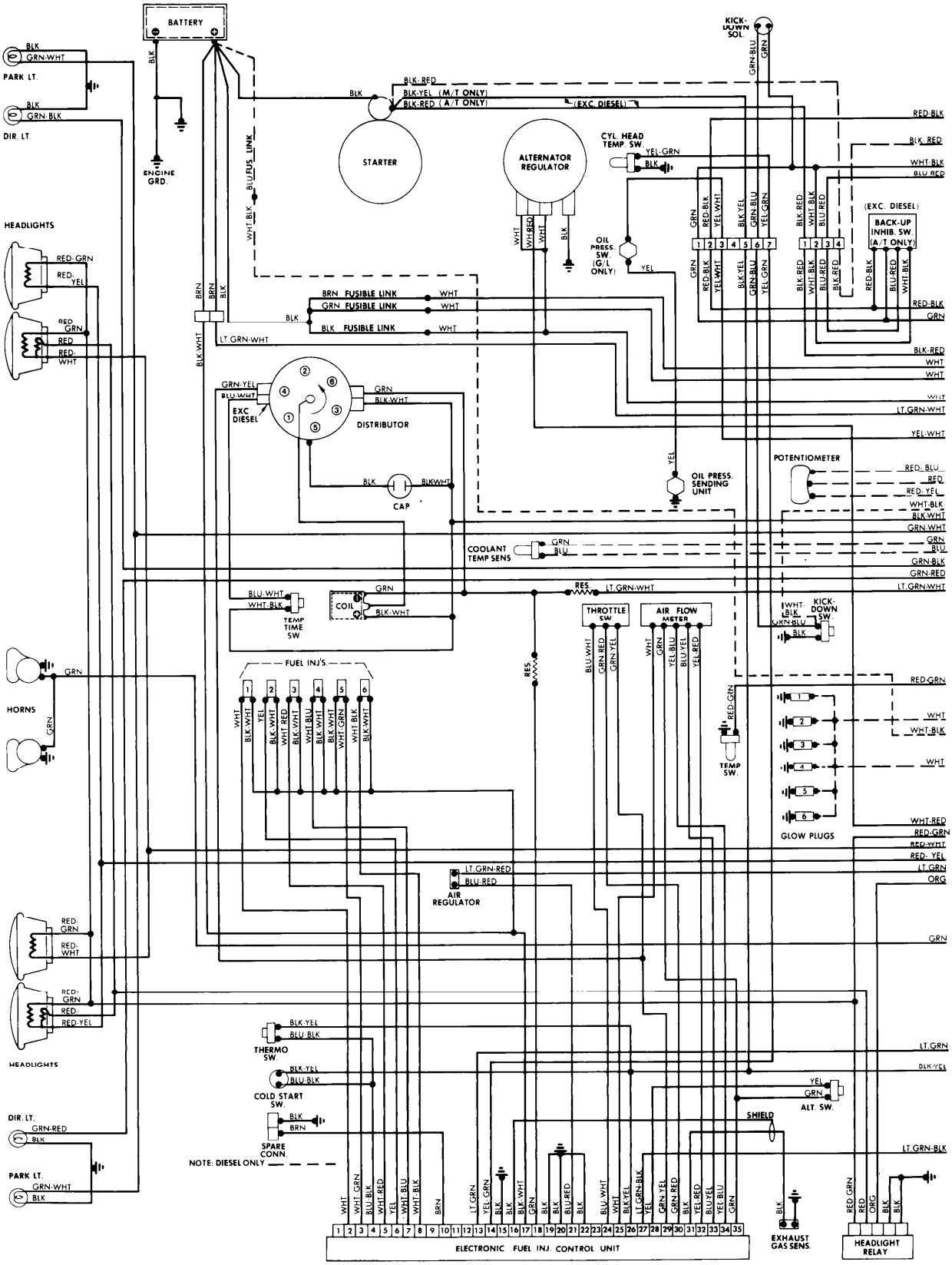

Copyright (c) 2001 Mitchell Repair Information Company

1982 Datsun/Nissan

MAXIMA & MAXIMA DIESEL (Cont.)

ENGINE COMPARTMENT & UNDERDASH

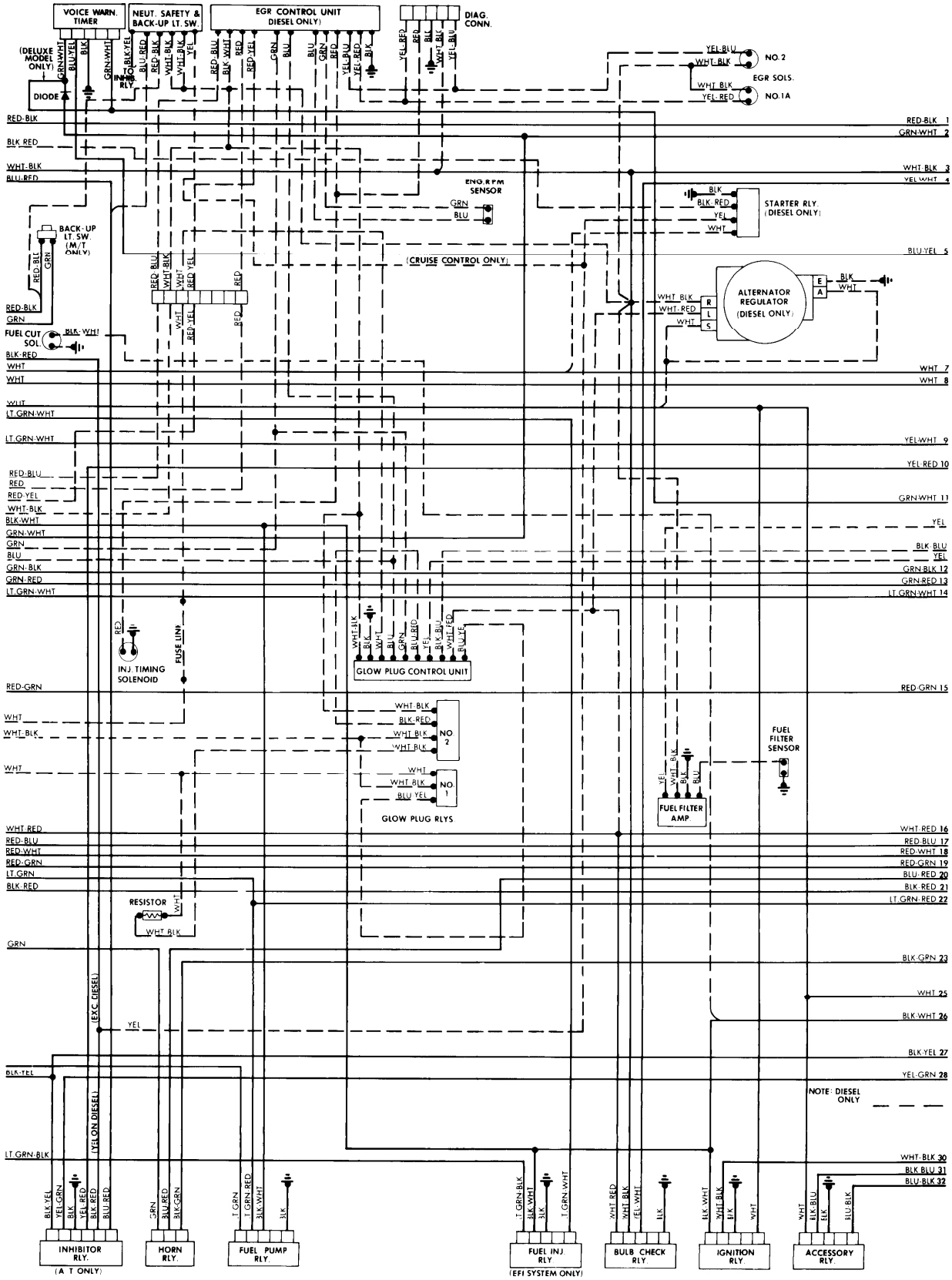

Copyright (c) 2001 Mitchell Repair Information Company

1982 Datsun/Nissan

MAXIMA & MAXIMA DIESEL (Cont.)

FUSE BLOCK & UNDERDASH

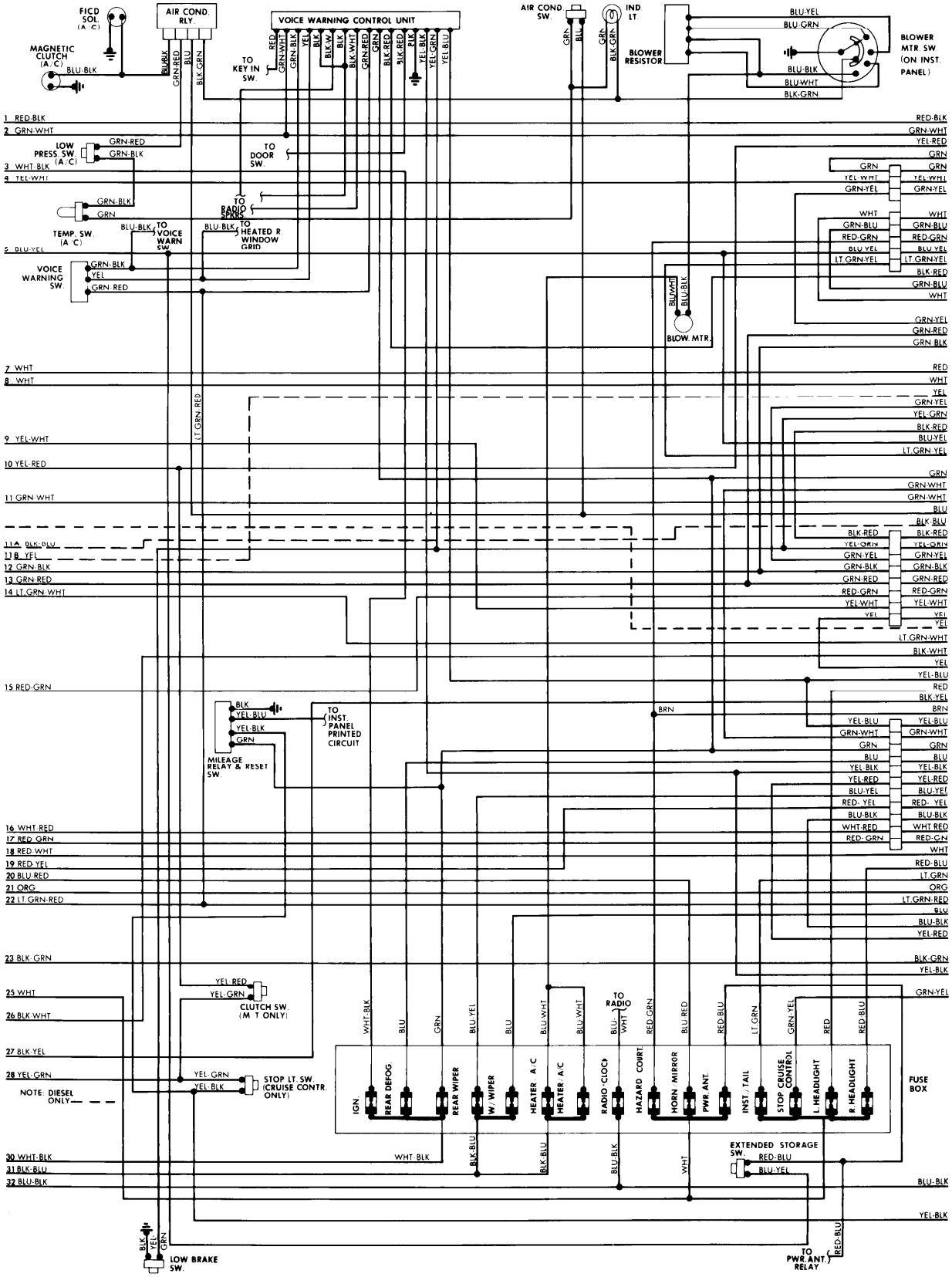

Copyright (c) 2001 Mitchell Repair Information Company

1982 Datsun/Nissan

MAXIMA & MAXIMA DIESEL (Cont.)

UNDERDASH

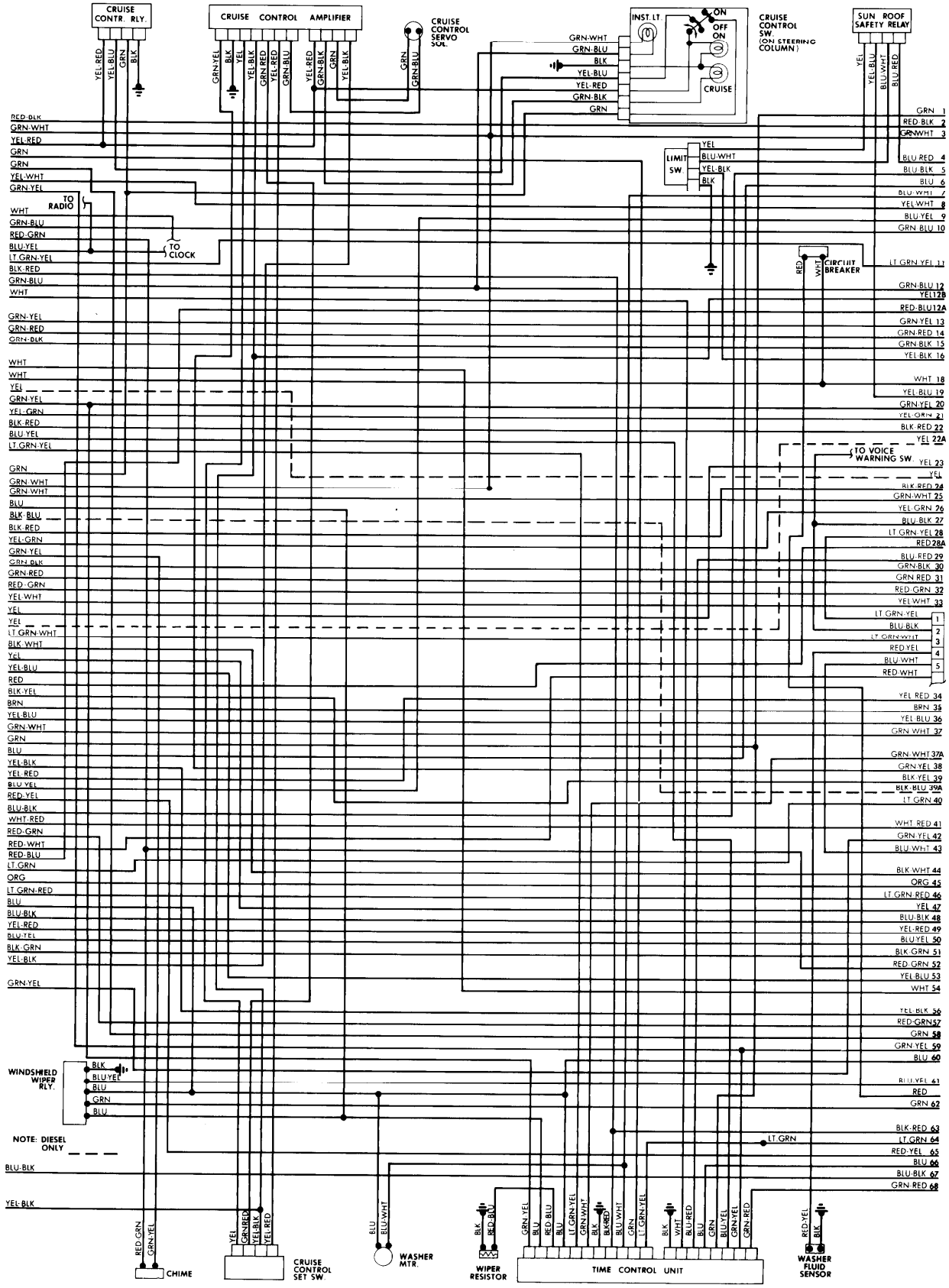

Copyright (c) 2001 Mitchell Repair Information Company

1982 Datsun/Nissan

MAXIMA & MAXIMA DIESEL (Cont.)

INSTRUMENT PANEL & UNDERDASH

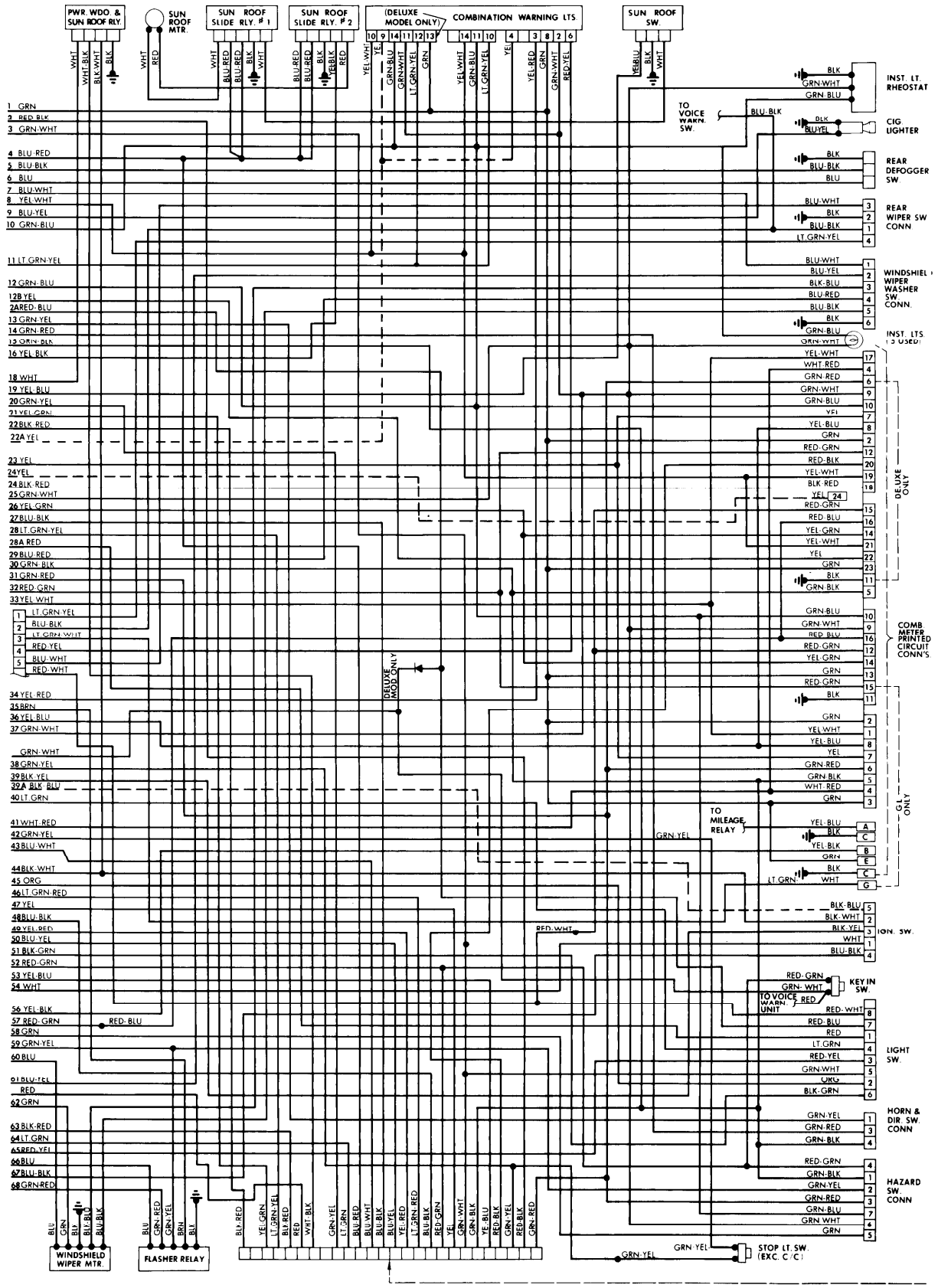

Copyright (c) 2001 Mitchell Repair Information Company

1982 Datsun/Nissan

MAXIMA & MAXIMA DIESEL (Cont.)

INSTRUMENT PANEL, REAR COMPARTMENT & ACCESSORIES

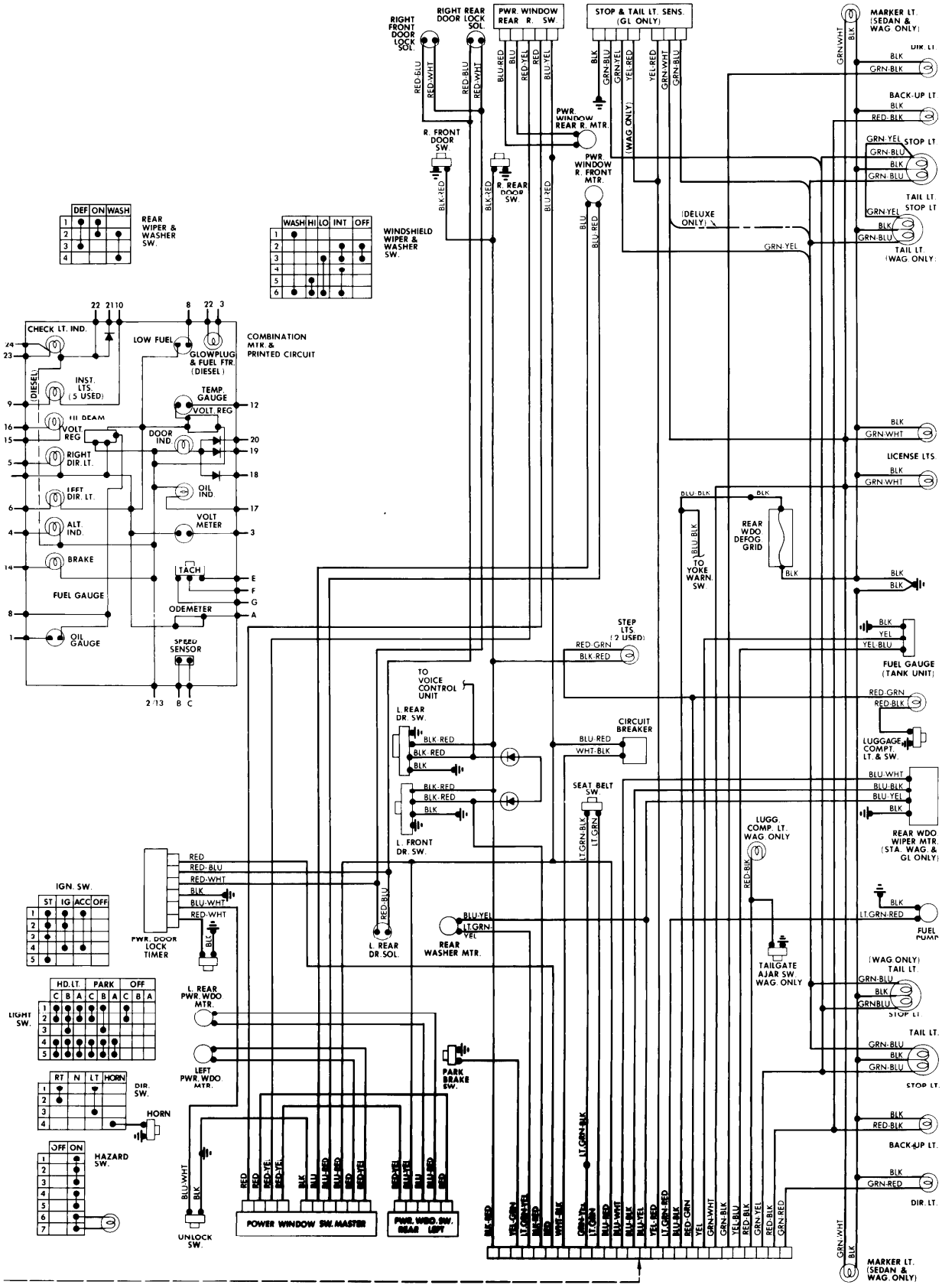

Copyright (c) 2001 Mitchell Repair Information Company