ENGINE COMPARTMENT

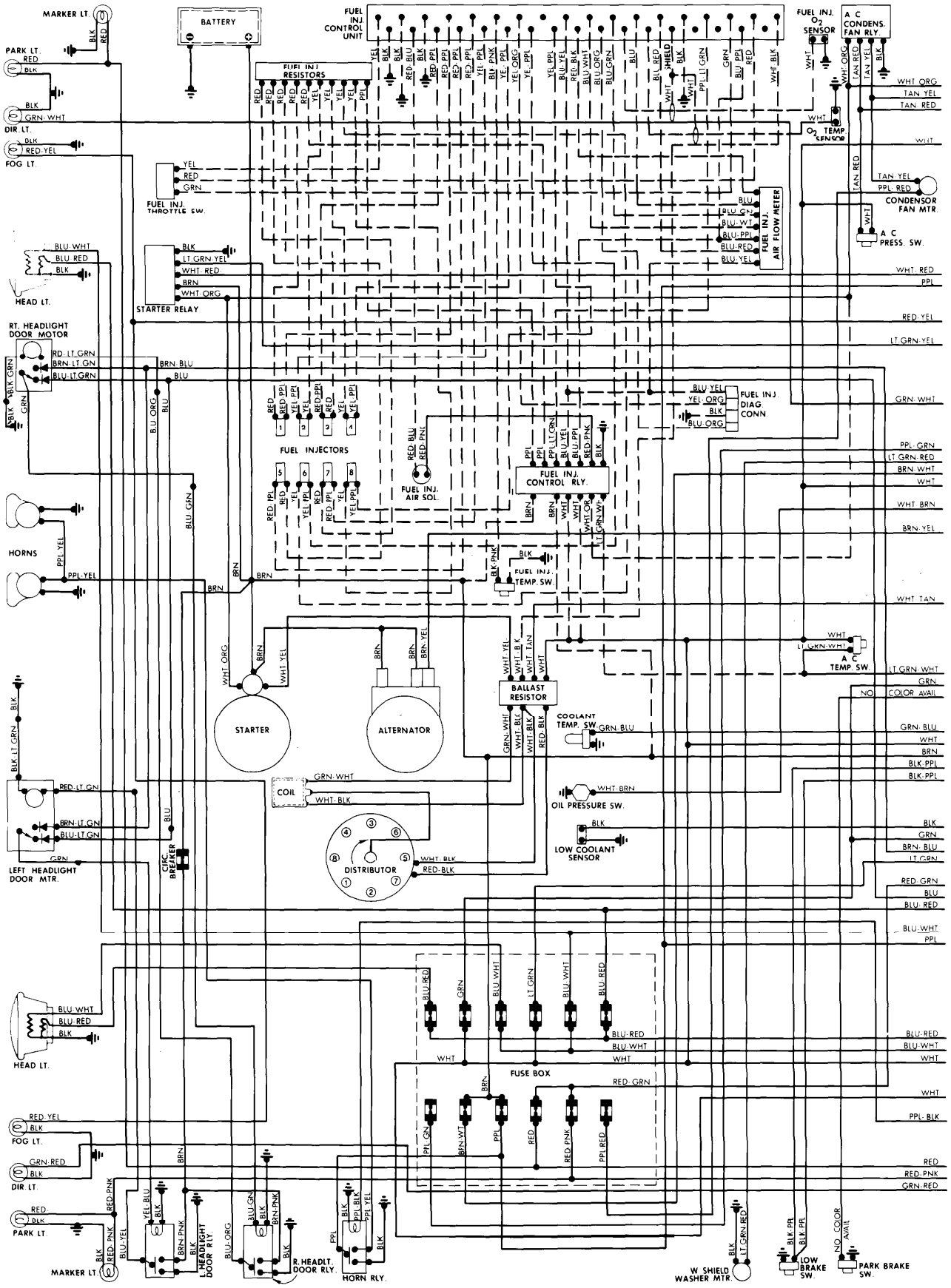

Copyright (c) 2001 Mitchell Repair Information Company

INSTRUMENT PANEL & REAR COMPARTMENT

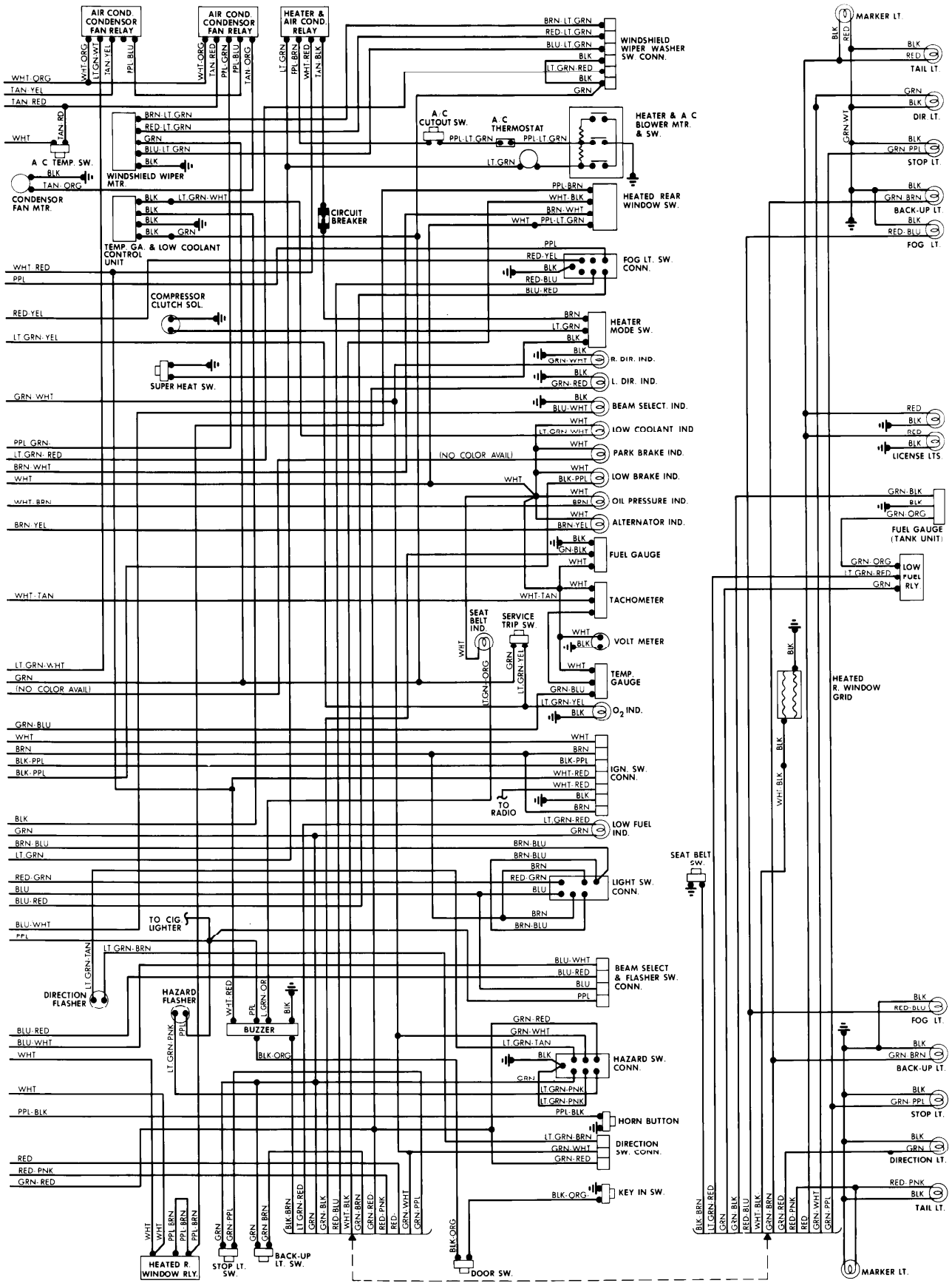

Copyright (c) 2001 Mitchell Repair Information Company