## ENGINE COMPARTMENT & FUSE BLOCK

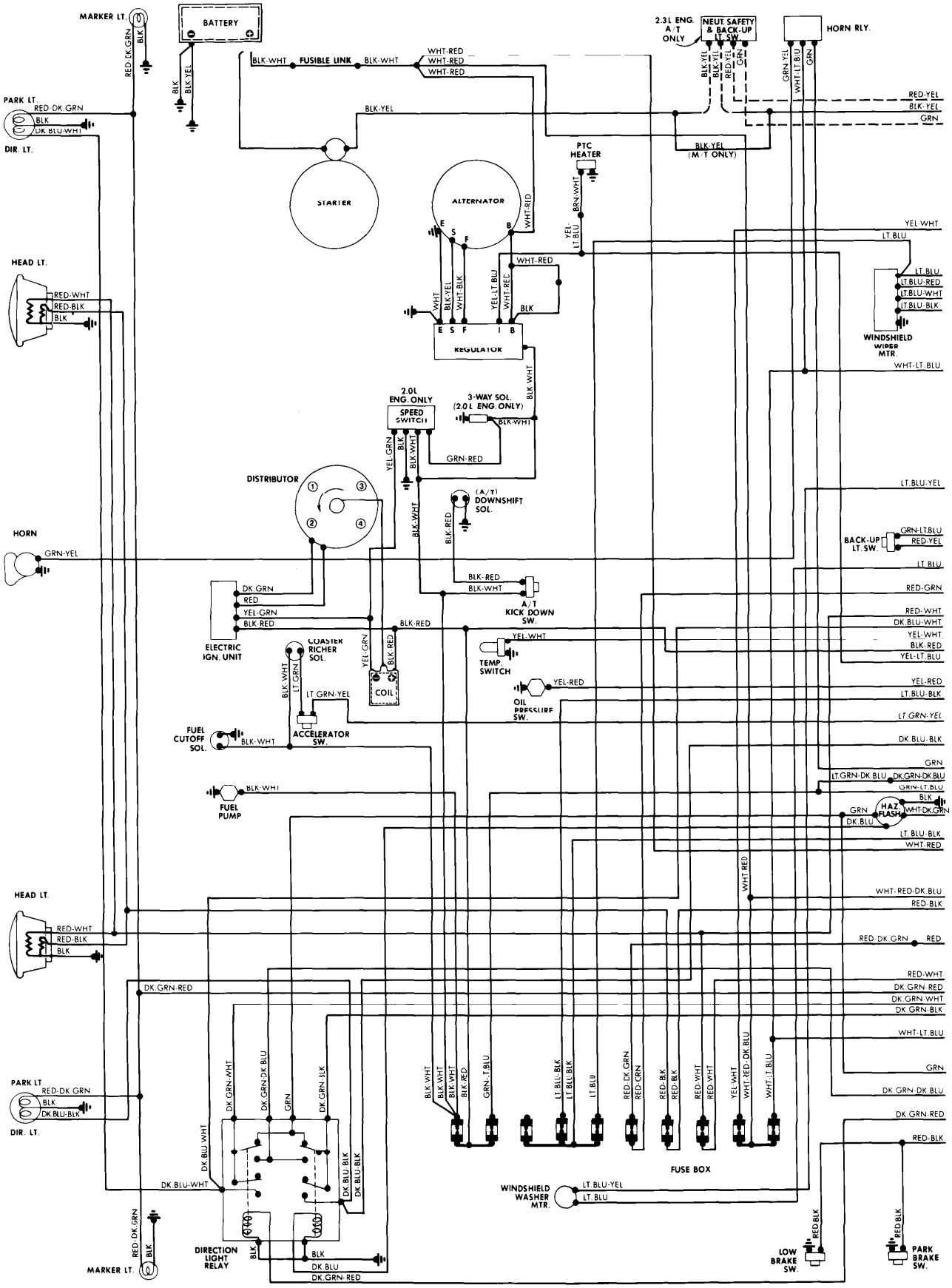


Copyright (c) 2001 Mitchell Repair Information Company

## INSTRUMENT PANEL & REAR COMPARTMENT

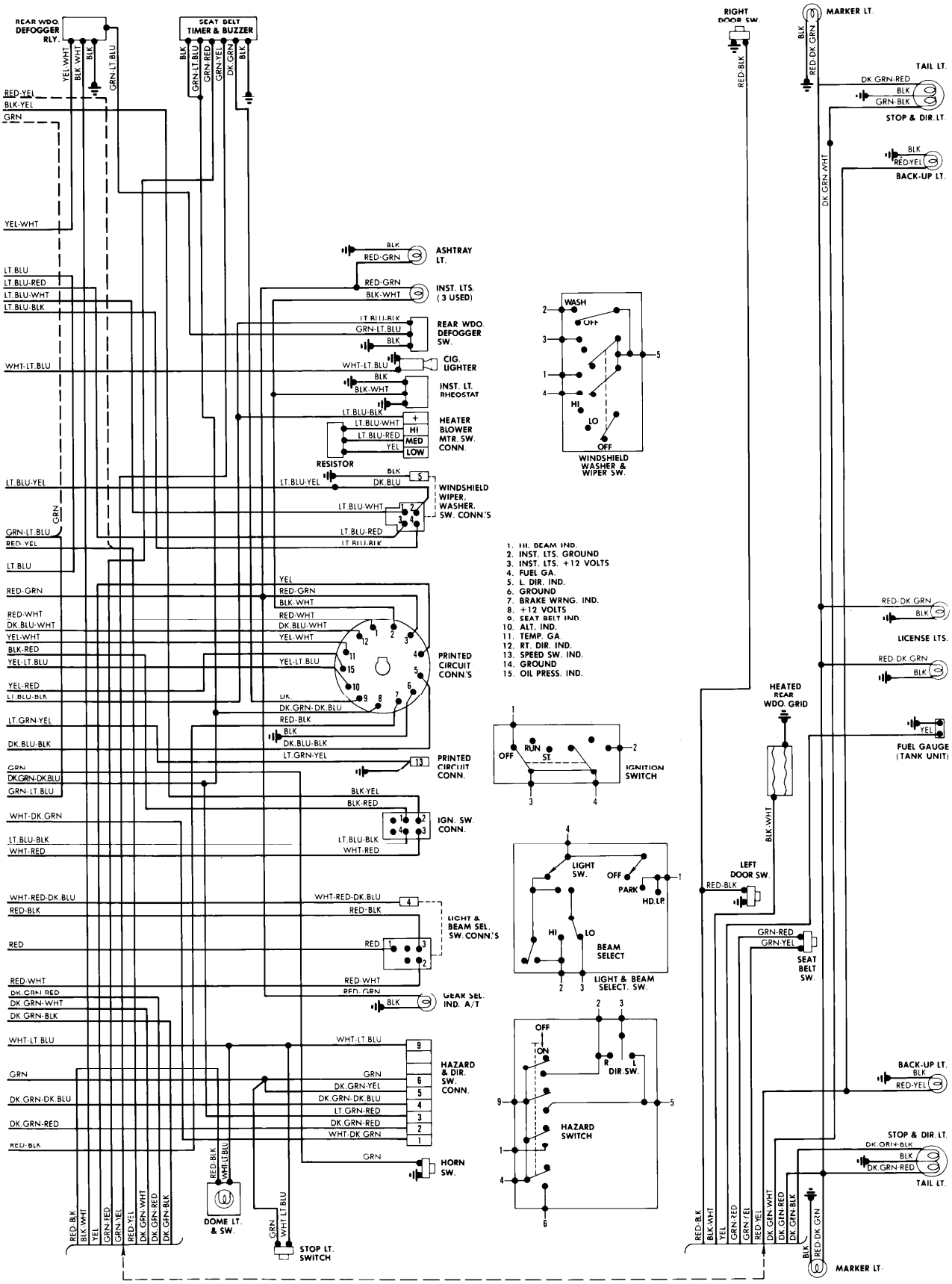


Copyright (c) 2001 Mitchell Repair Information Company