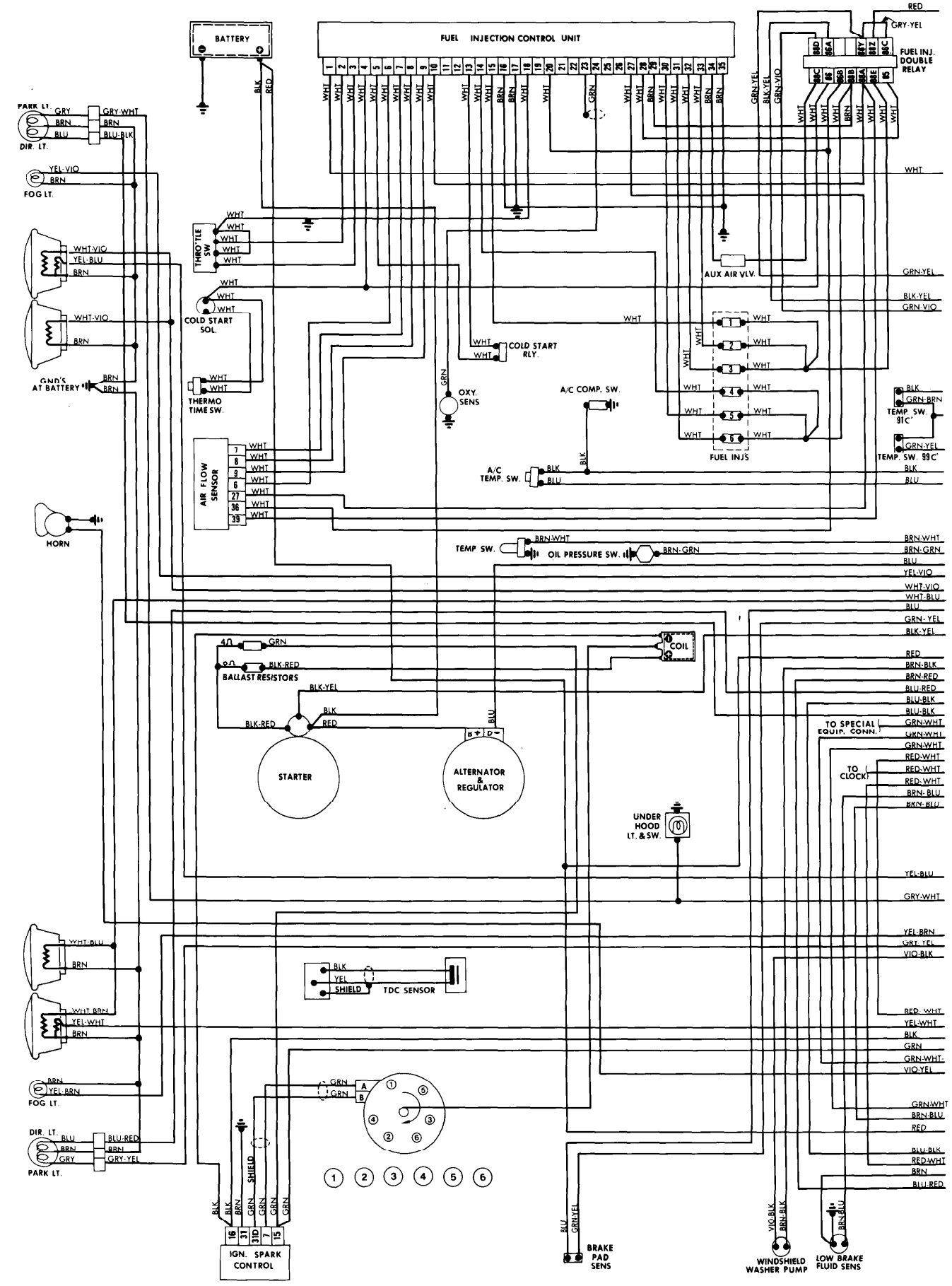


Copyright (c) 2001 Mitchell Repair Information Company

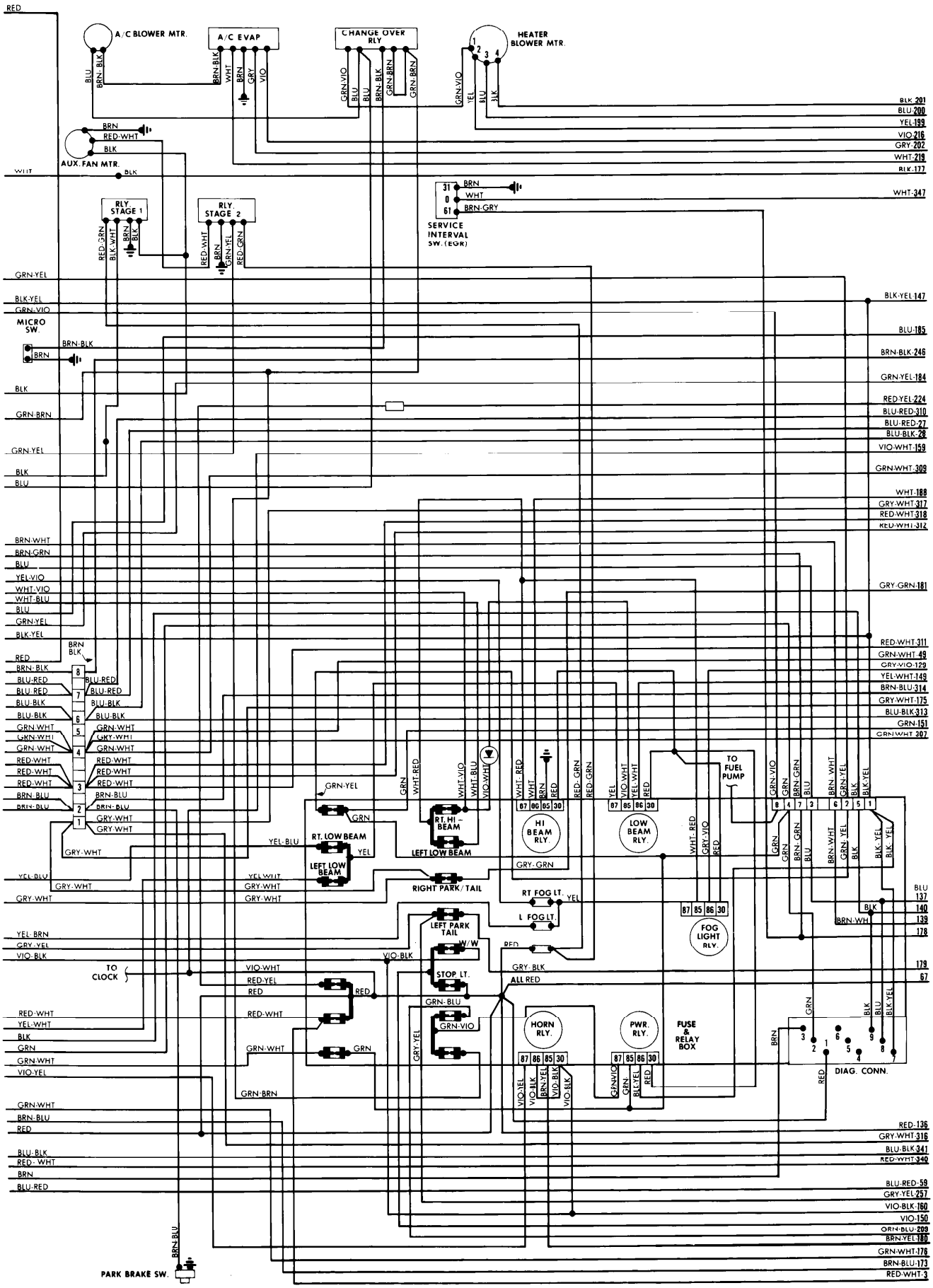


Copyright (c) 2001 Mitchell Repair Information Company

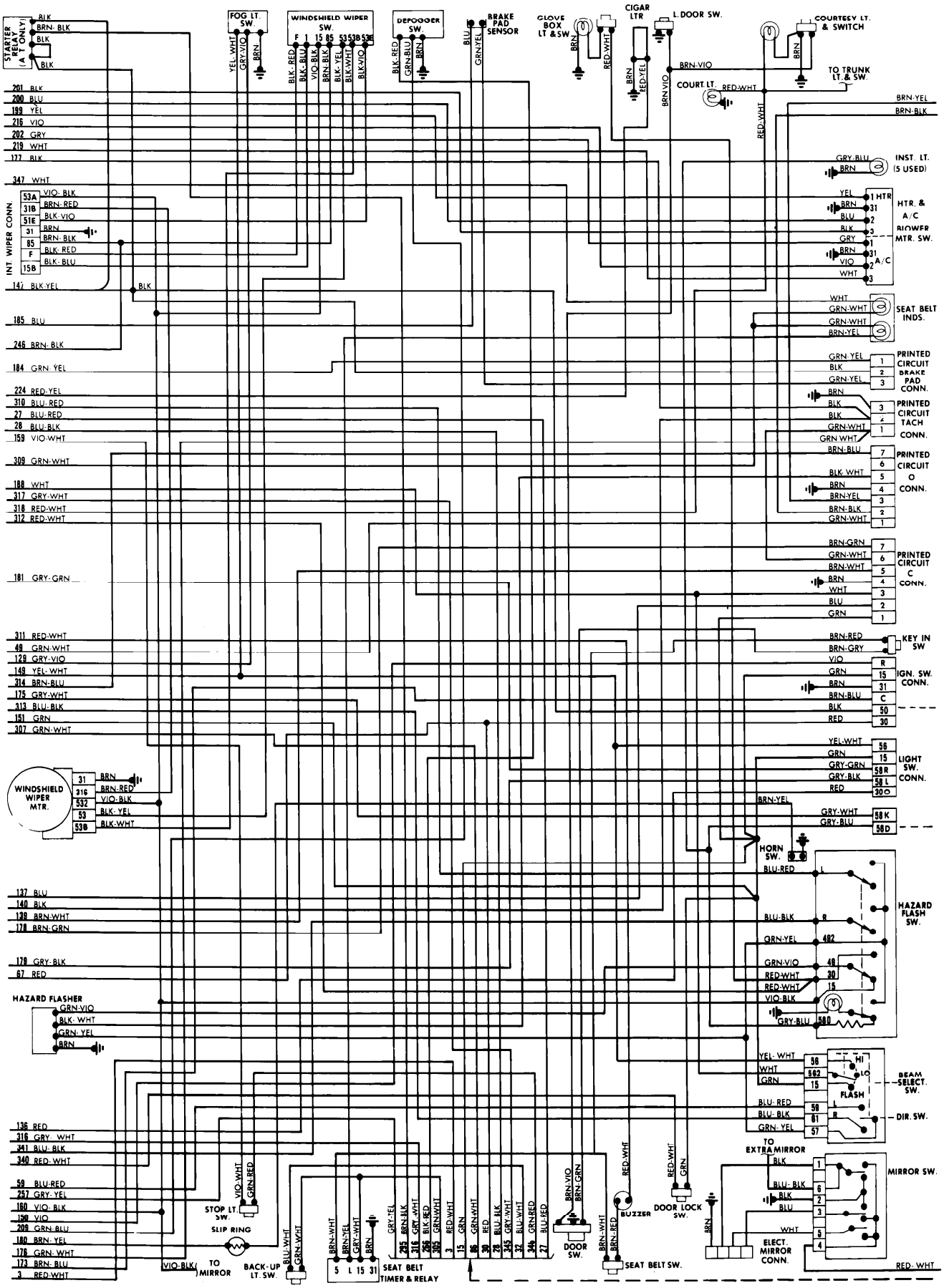


Copyright (c) 2001 Mitchell Repair Information Company

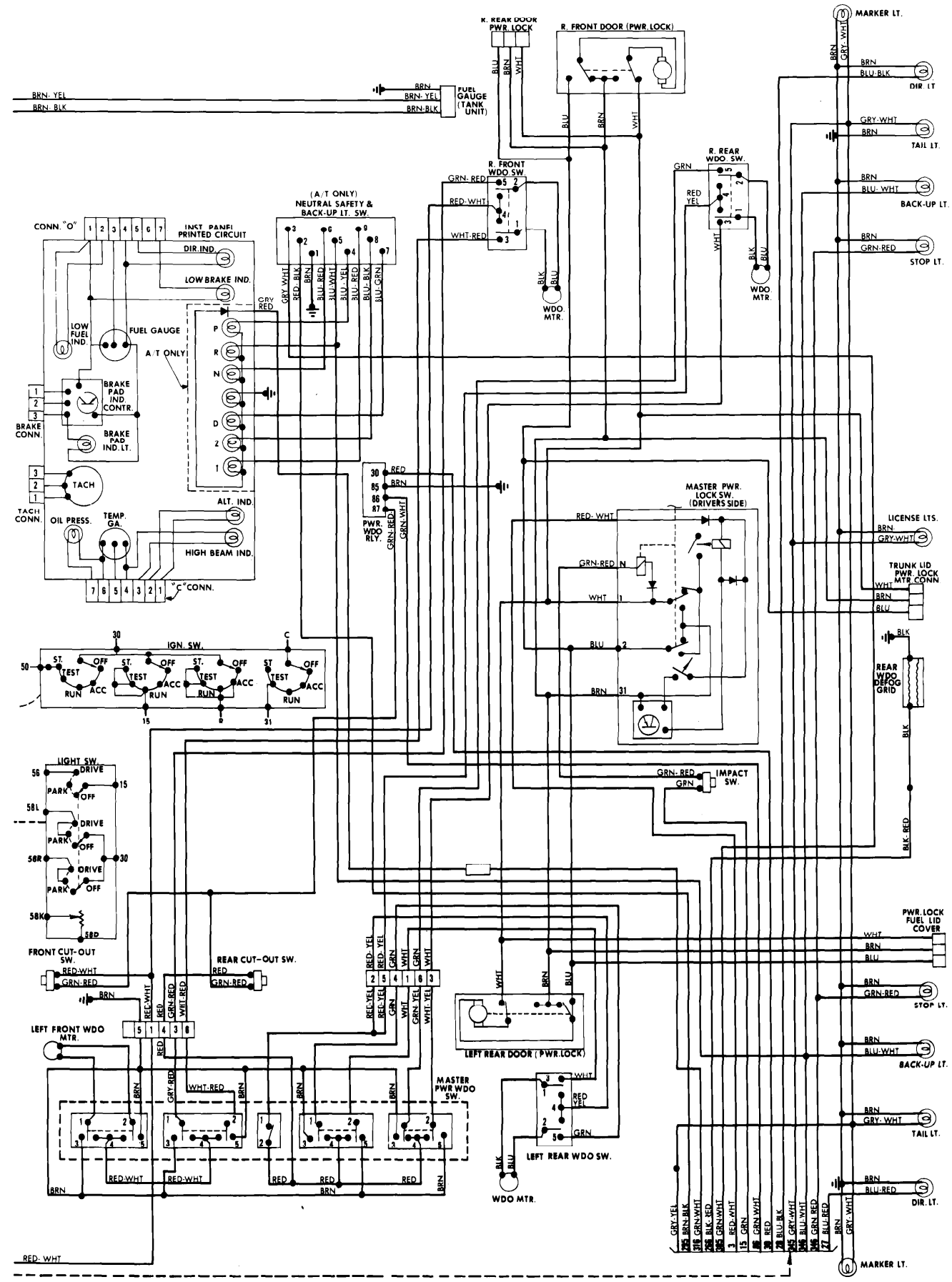


Copyright (c) 2001 Mitchell Repair Information Company