HEATER AND AIR CONDITIONING SYSTEMS (Cont.)

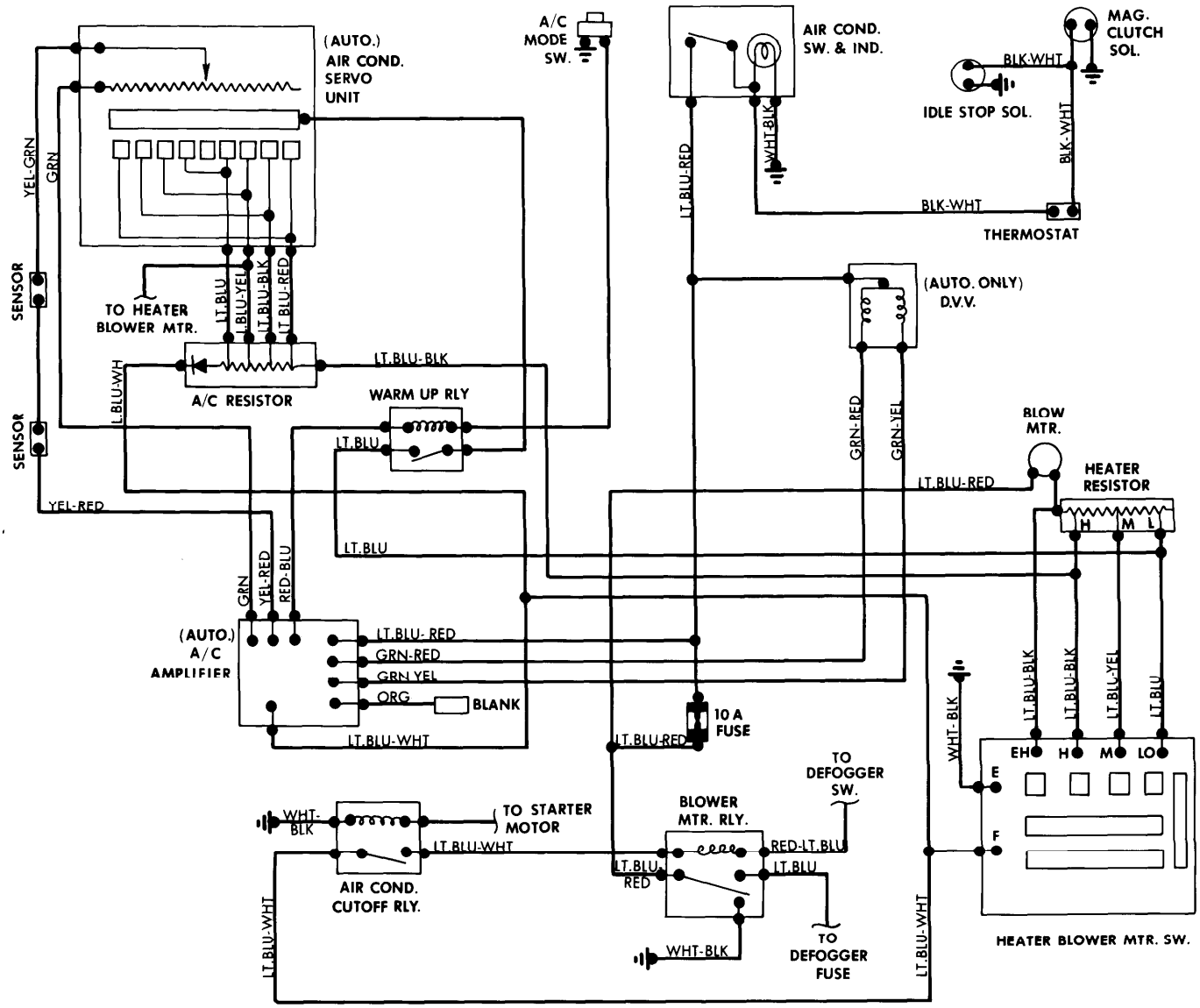

Heater and Air Conditioning System (Toyota)

MAINTENANCE REMINDER SYSTEMS

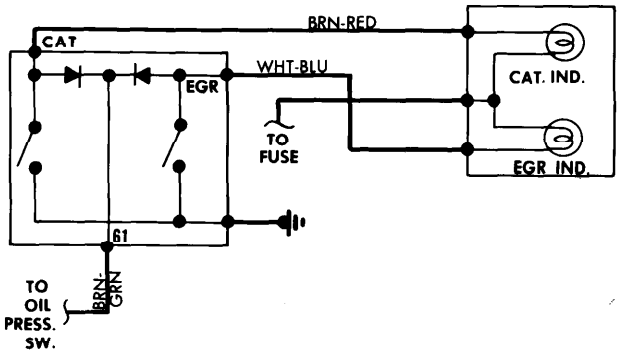

EGR and Converter Reminder System (BMW 320i)

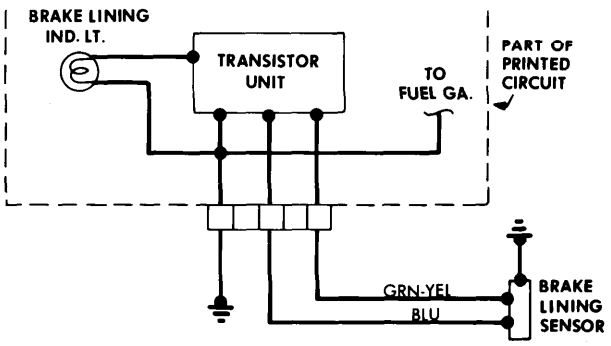

Brake Lining Reminder System (BMW 528i)

Copyright (c) 2001 Mitchell Repair Information Company