WINDSHIELD WIPER SYSTEMS (Cont.)

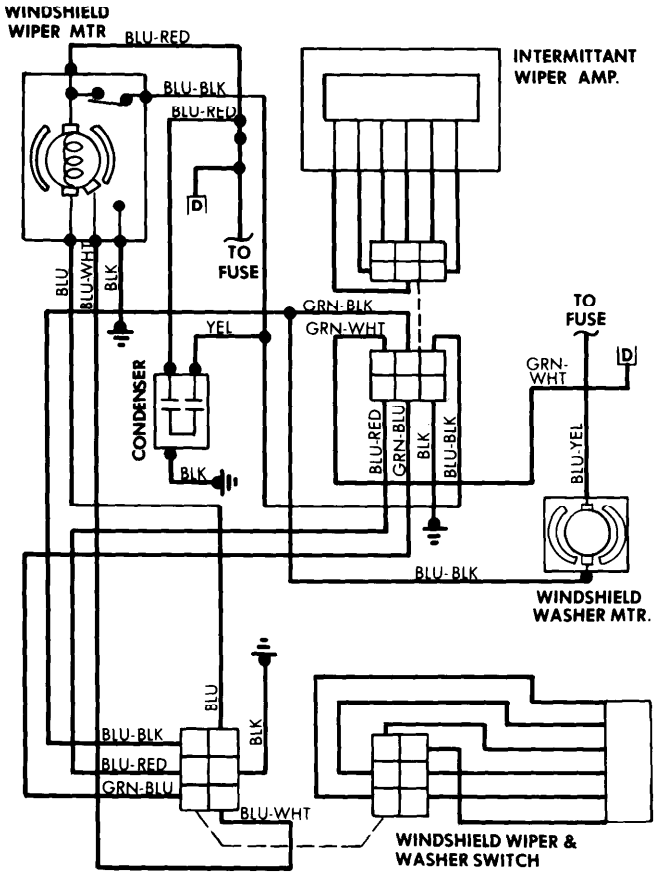

Windshield Wiper System Wiring Diagram (Datsun 200SX)

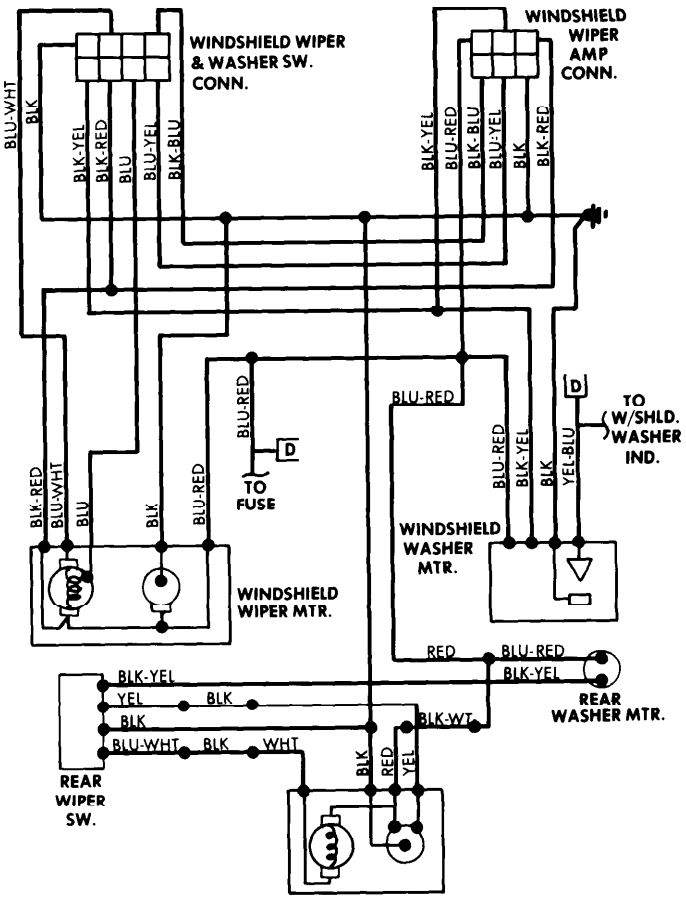

Windshield Wiper System Wiring Diagram (Datsun 810)

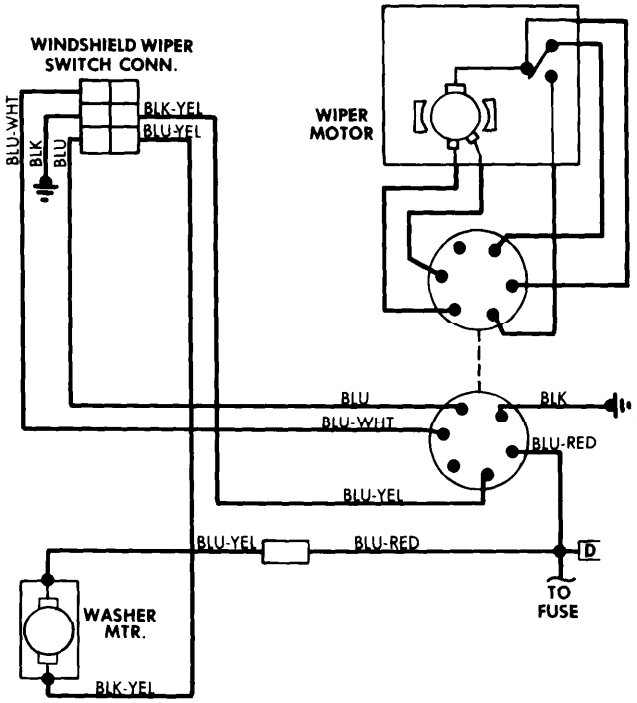

Windshield Wiper System Wiring Diagram (Datsun B210)

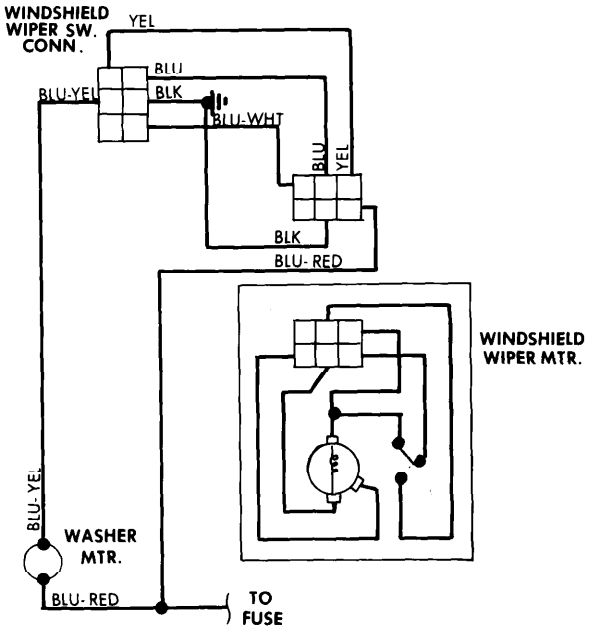

Windshield Wiper System Wiring Diagram (Datsun F10)

Copyright (c) 2001 Mitchell Repair Information Company