FUEL INJECTION SYSTEMS

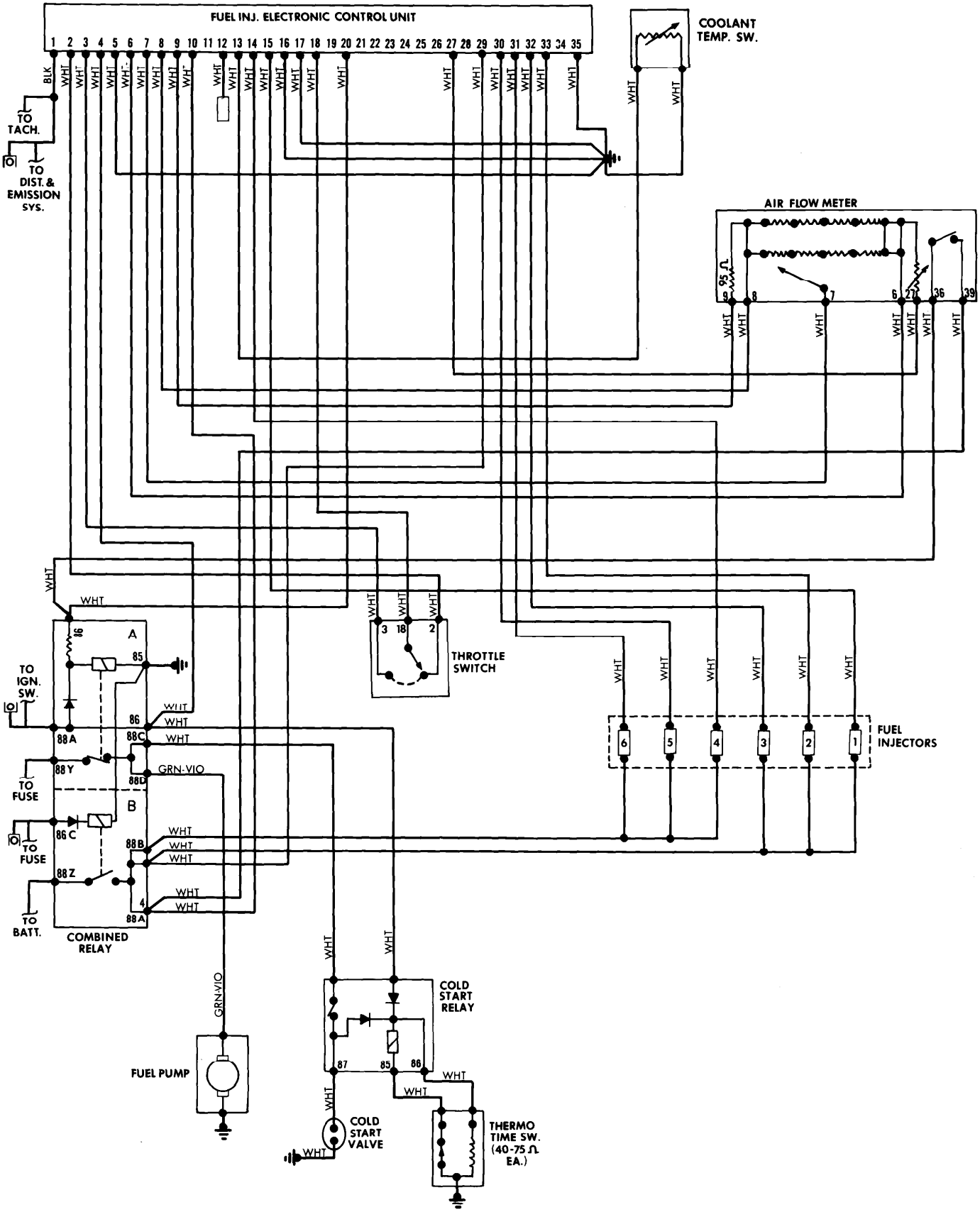

Fuel Injection System Wiring Diagram (BMW 633CSi and 733i)

Copyright (c) 2001 Mitchell Repair Information Company