WINDSHIELD WIPER SYSTEMS (Cont.)

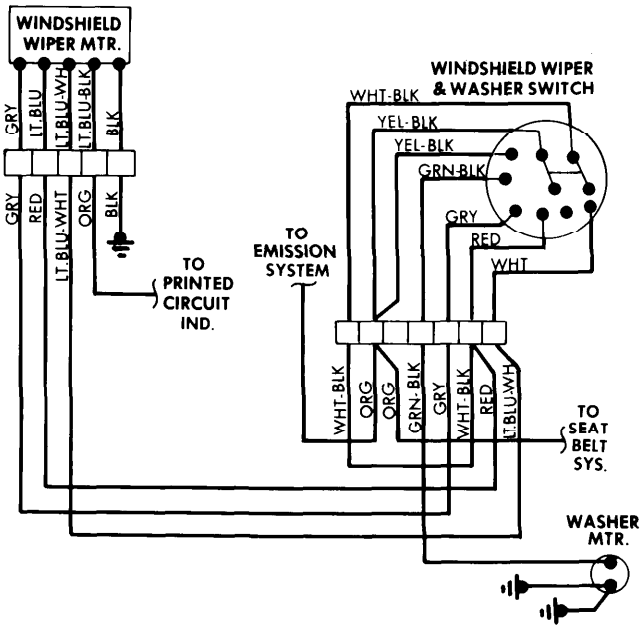

Windshield Wiper System Wiring Diagram (Fiat X1/9)

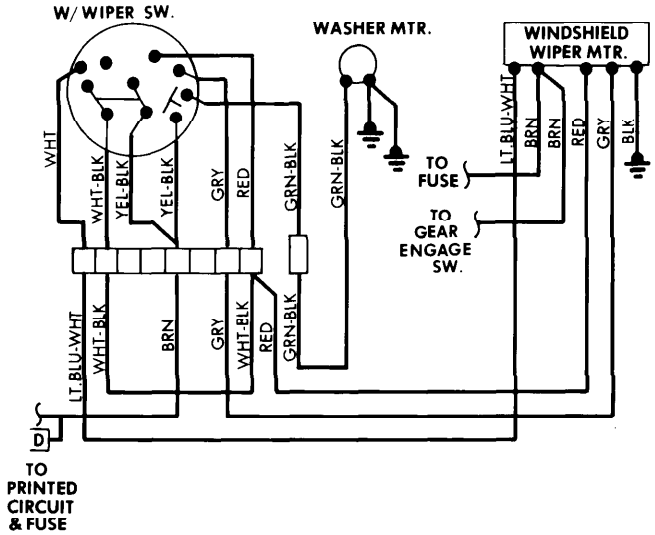

Windshield Wiper System Wiring Diagram (Fiat 128 Sedan)

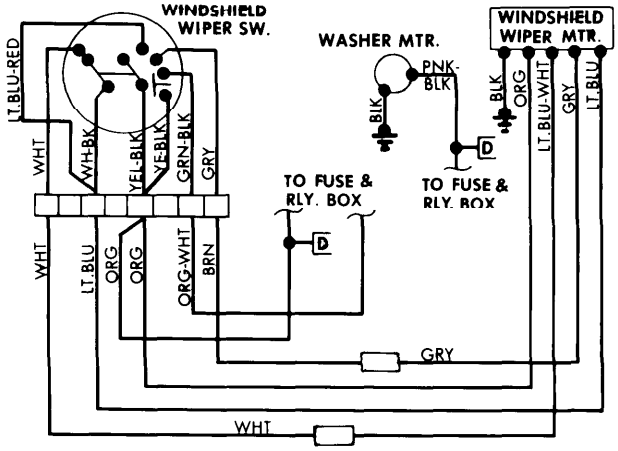

Windshield Wiper System Wiring Diagram (Fiat 131)

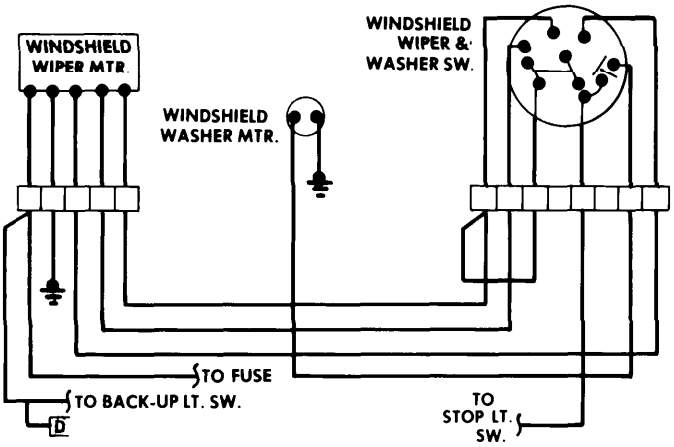

Windshield Wiper System Wiring Diagram (Fiat 128 3P)

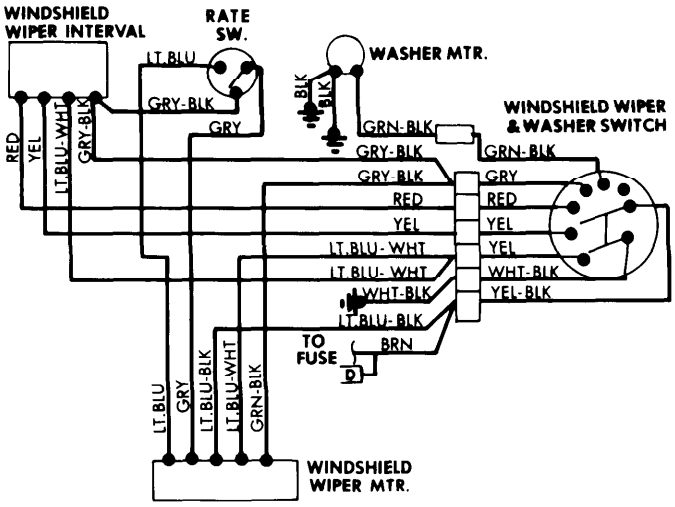

Windshield Wiper System Wiring Diagram (Fiat 124)

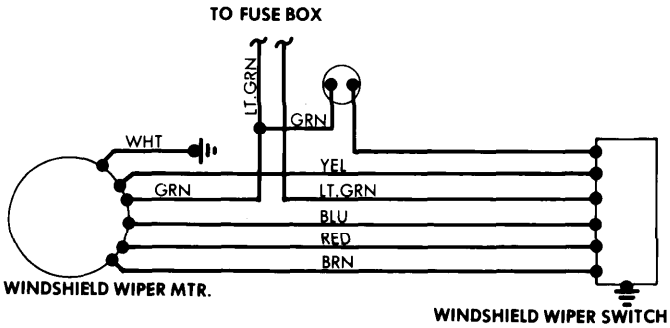

Windshield Wiper System Wiring Diagram (Jaguar)

Copyright (c) 2001 Mitchell Repair Information Company