SEAT BELT WARNING SYSTEMS

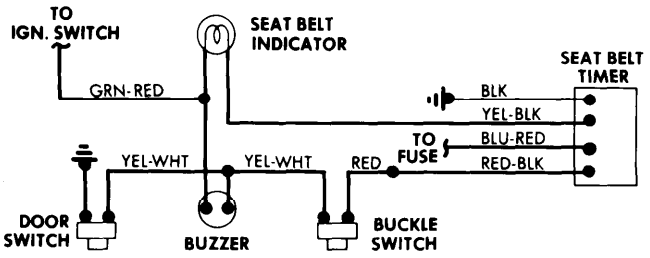

Seat Belt Warning System Wiring Diagram (Colt and Arrow)

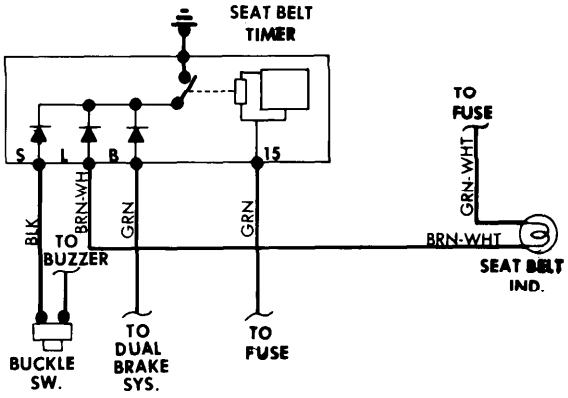

Seat Belt Warning System Wiring Diagram (BMW 530i)

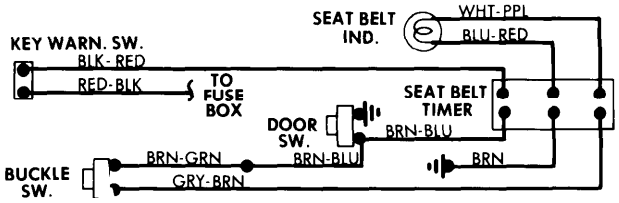

Seat Belt Warning System Wiring Diagram (Audi 100LS)

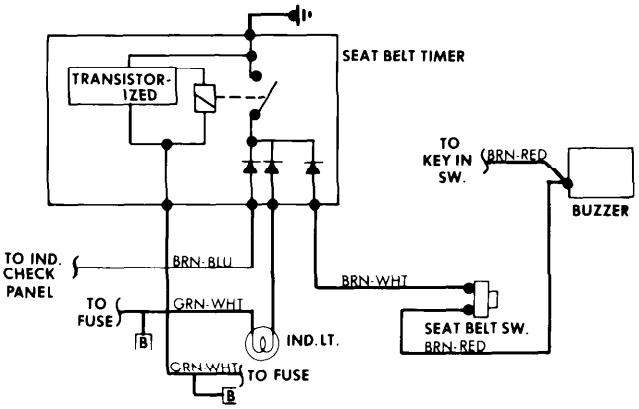

Seat Belt Warning System Wiring Diagram (BMW 630CSi)

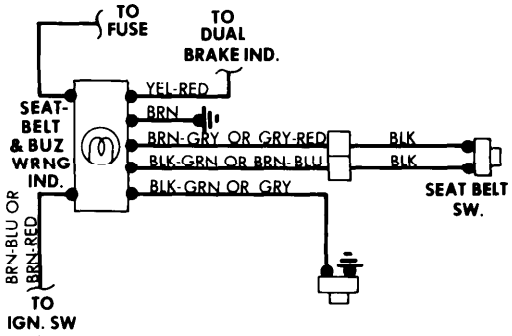

Seat Belt Warning System Wiring Diagram (Audi Fox and VW Dasher)

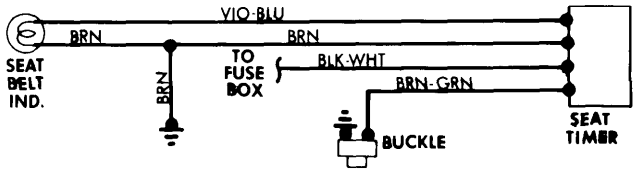

Seat Belt Warning System Wiring Diagram (Capri)

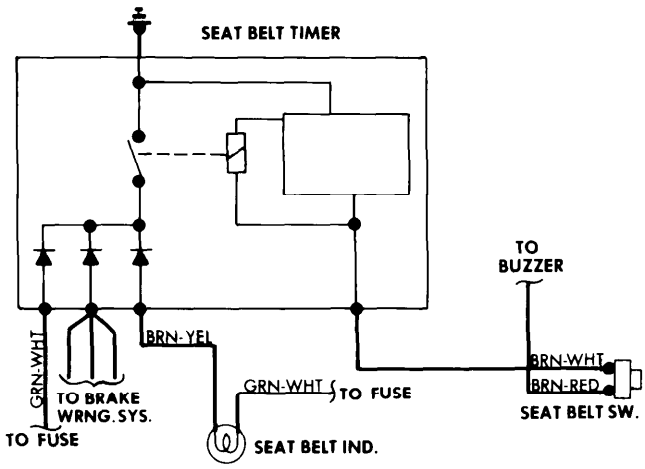

Seat Belt Warning System Wiring Diagram (BMW 320i)

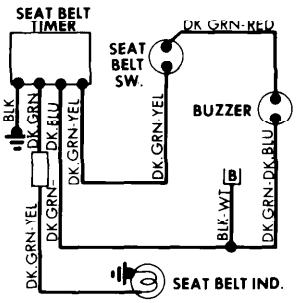

Seat Belt Warning System Wiring Diagram (Courier)

Copyright (c) 2001 Mitchell Repair Information Company