1977 Volkswagen

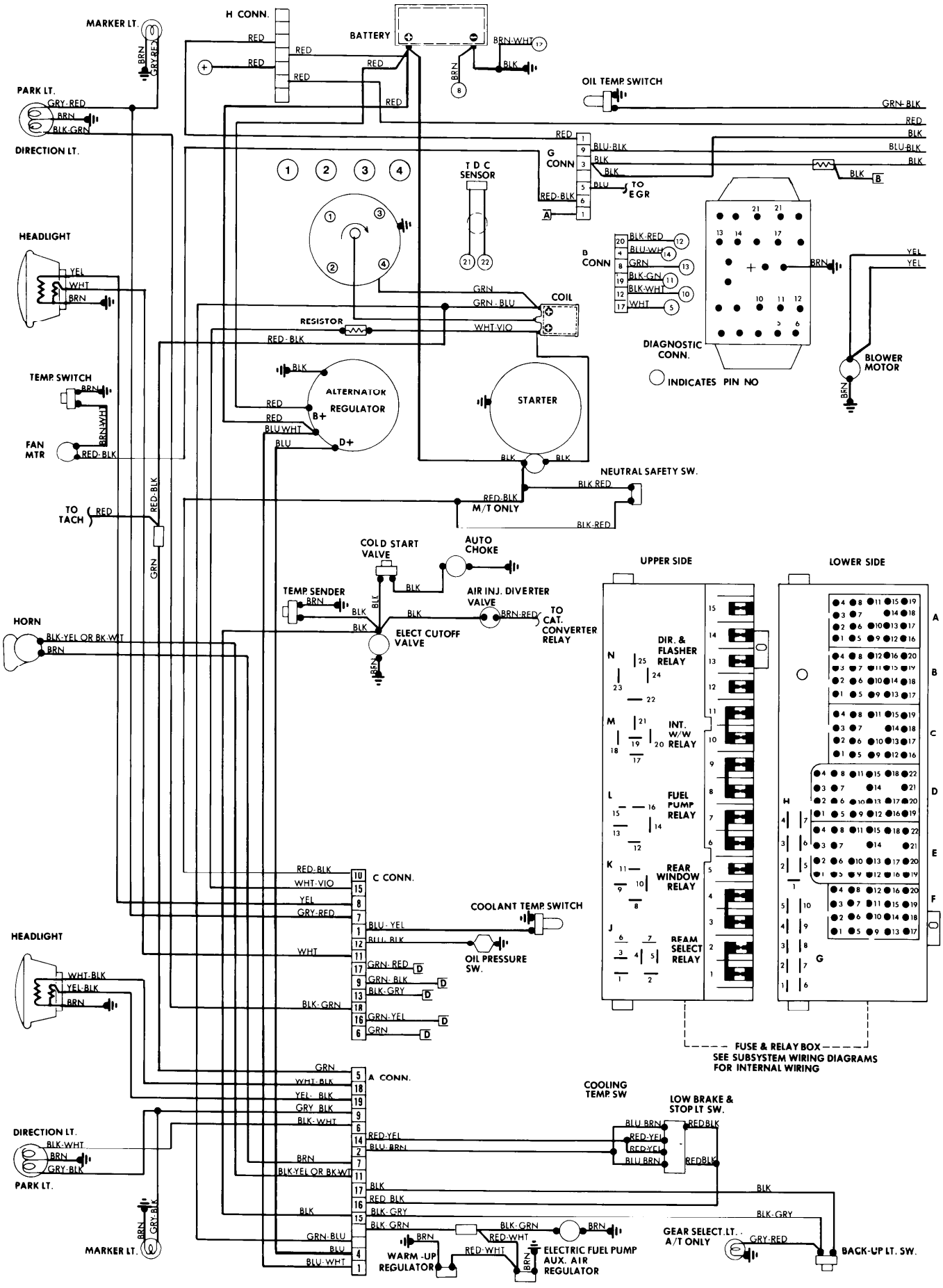

Copyright (c) 2001 Mitchell Repair Information Company

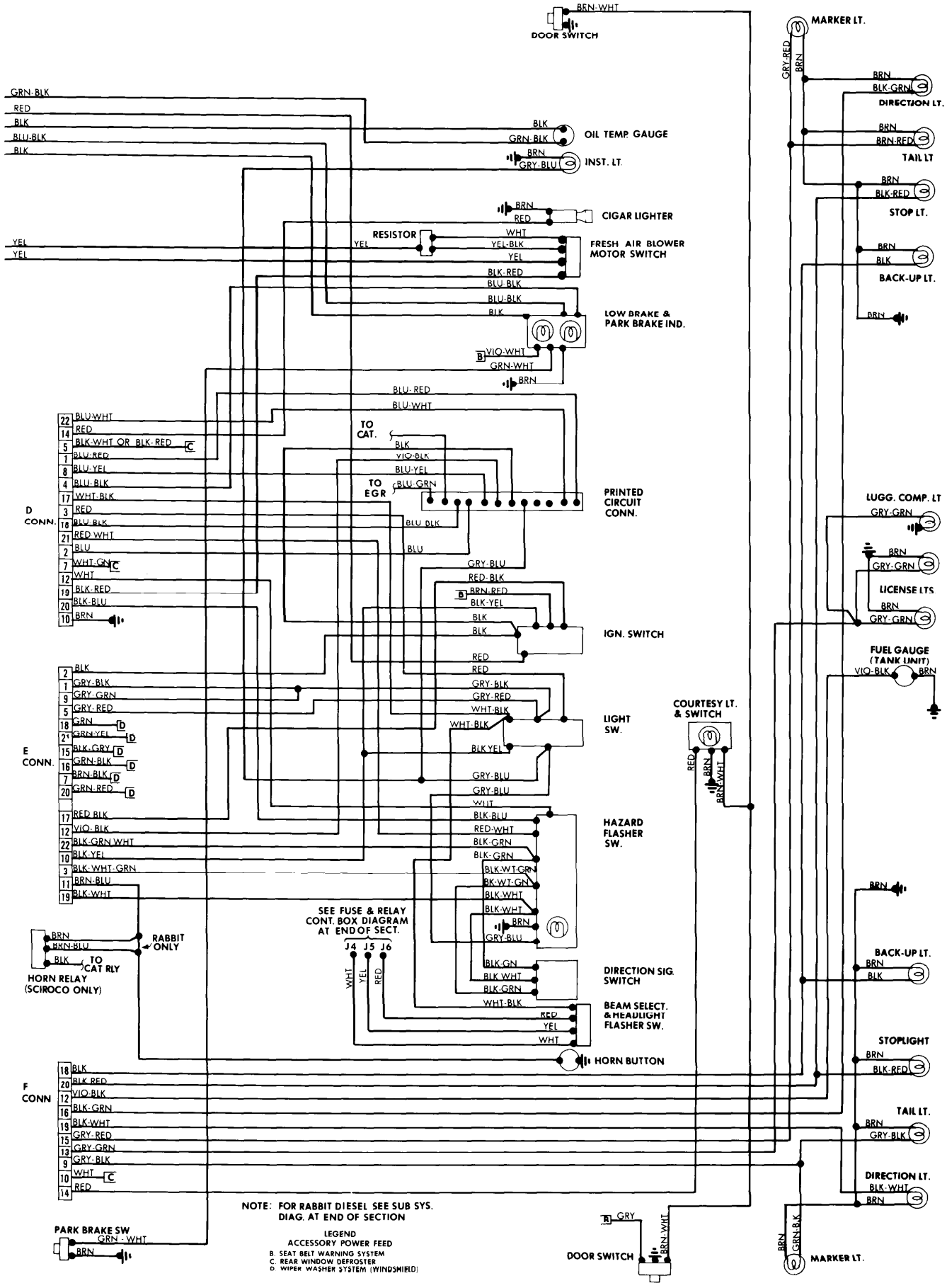

NOTE: FOR RABBIT DIESEL SEE SUB SYS. DIAG. AT END OF SECTION

LEGEND
ACCESSORY POWER FEED
B. SEAT BELT WARNING SYSTEM
C. REAR WINDOW DEFROSTER
D. WIPER WASHER SYSTEM (WINDSHIELD)

Copyright (c) 2001 Mitchell Repair Information Company