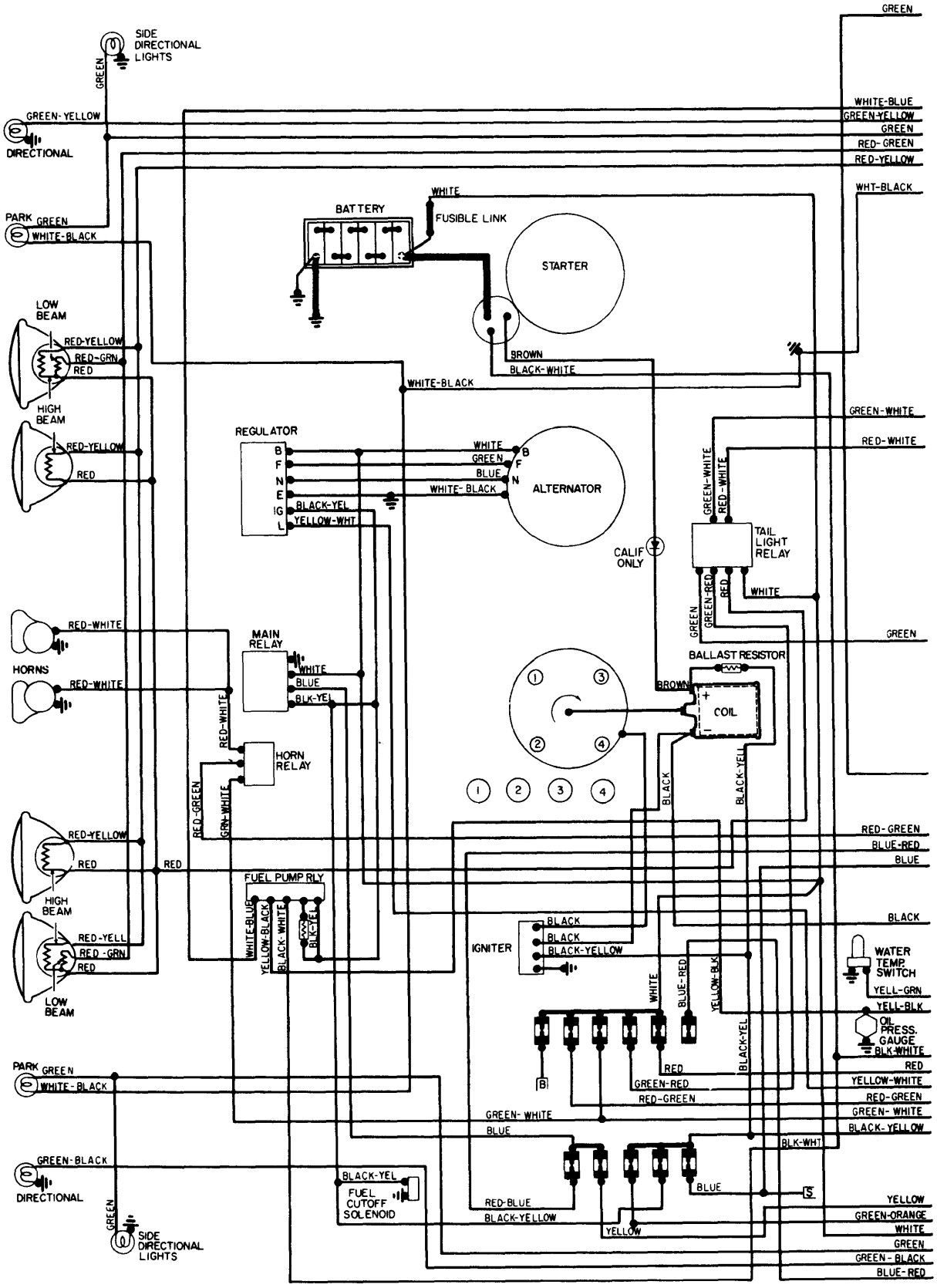

LEGEND
ACCESSORY POWER FEED

B. SEAT BELT WARNING SYSTEM
S. WIPER/WASHER SYSTEM (REAR WINDOW)

Copyright (c) 2001 Mitchell Repair Information Company

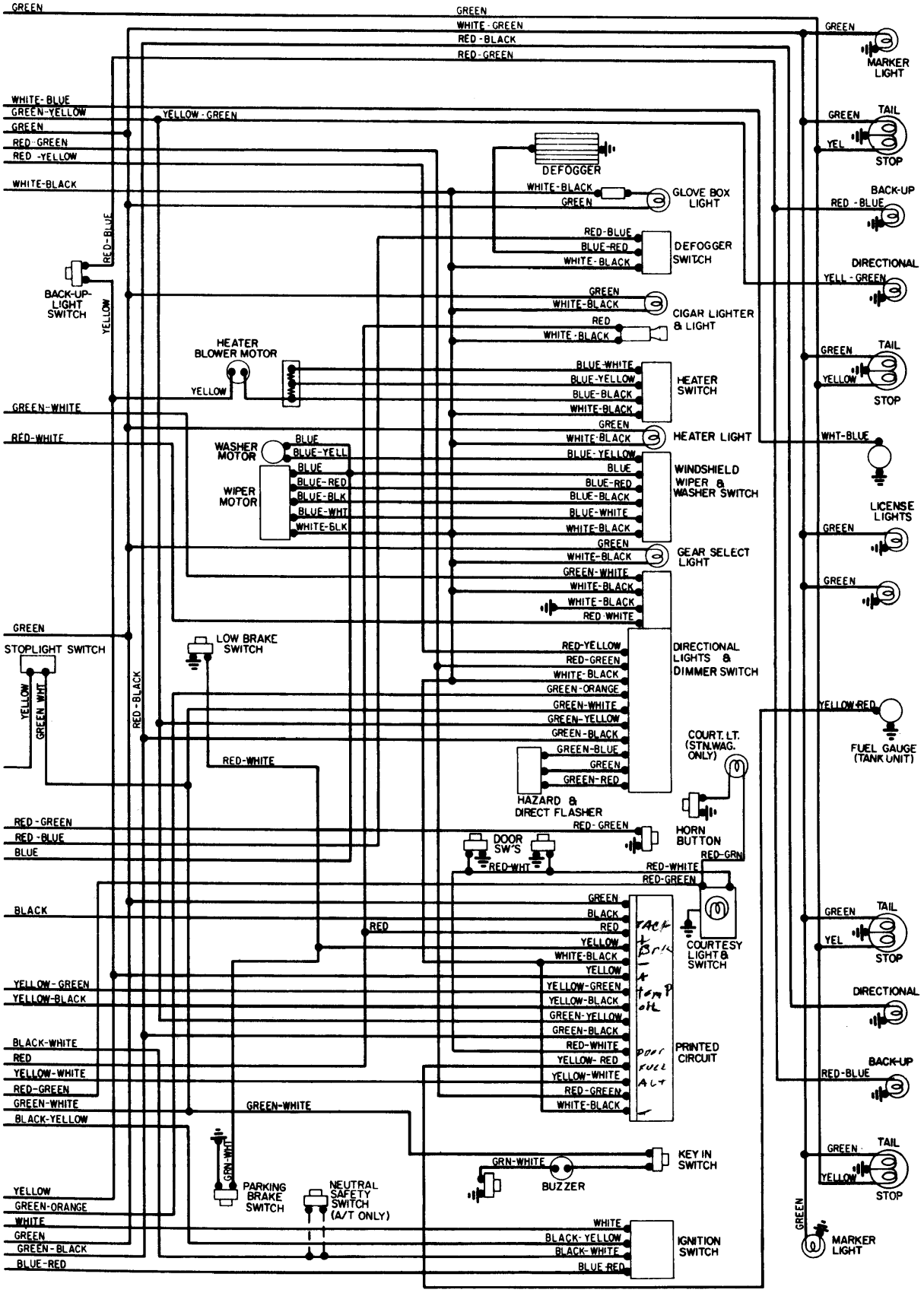

Copyright (c) 2001 Mitchell Repair Information Company