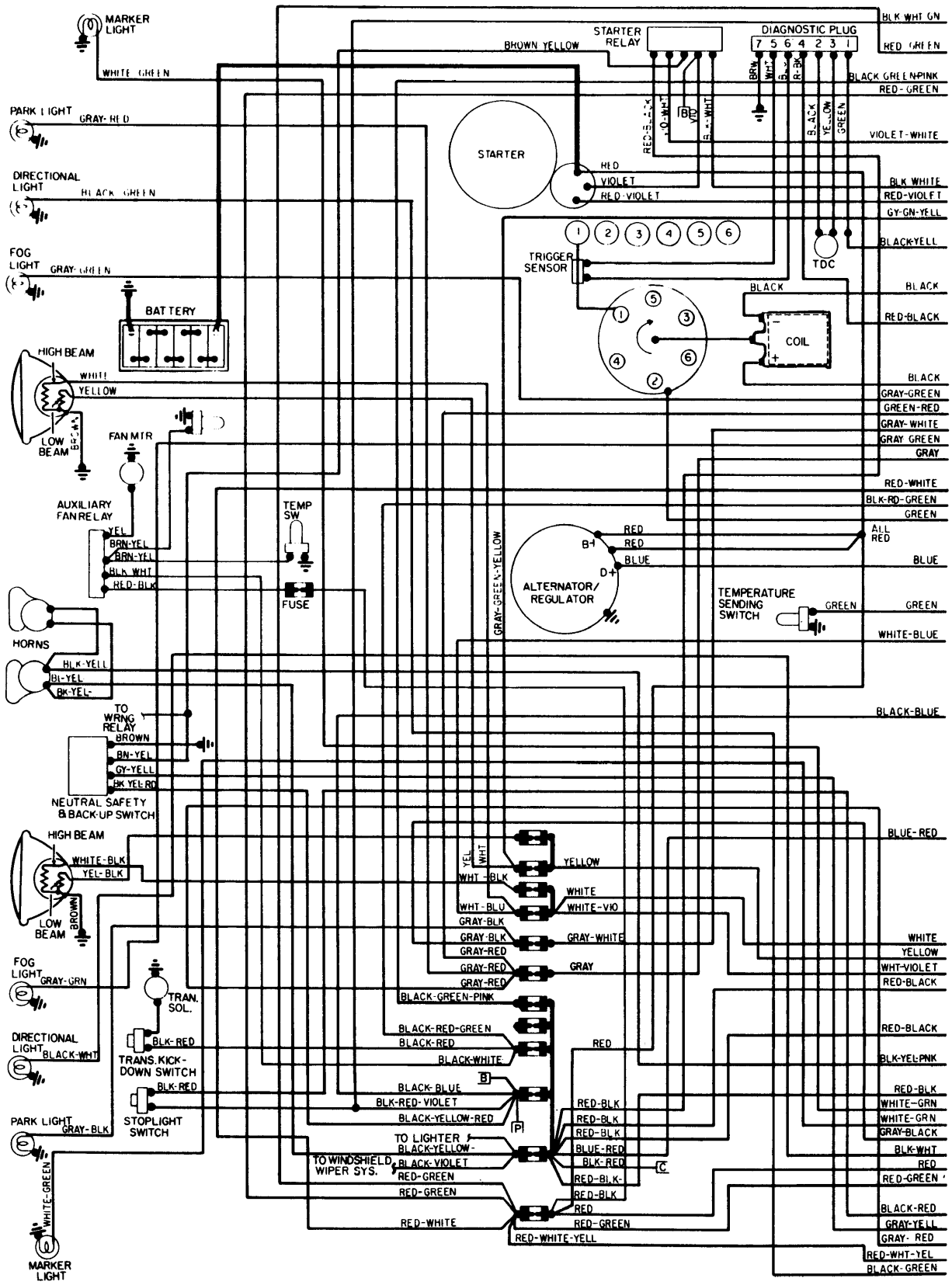

LEGEND
ACCESSORY POWER FEED

A. AIR CONDITIONING (MANUAL SYSTEM)
B. SEAT BELT WARNING SYSTEM
C. REAR WINDOW DEFROSTER (GRID)
P. POWER WINDOW CONTROL SYSTEM

Copyright (c) 2001 Mitchell Repair Information Company

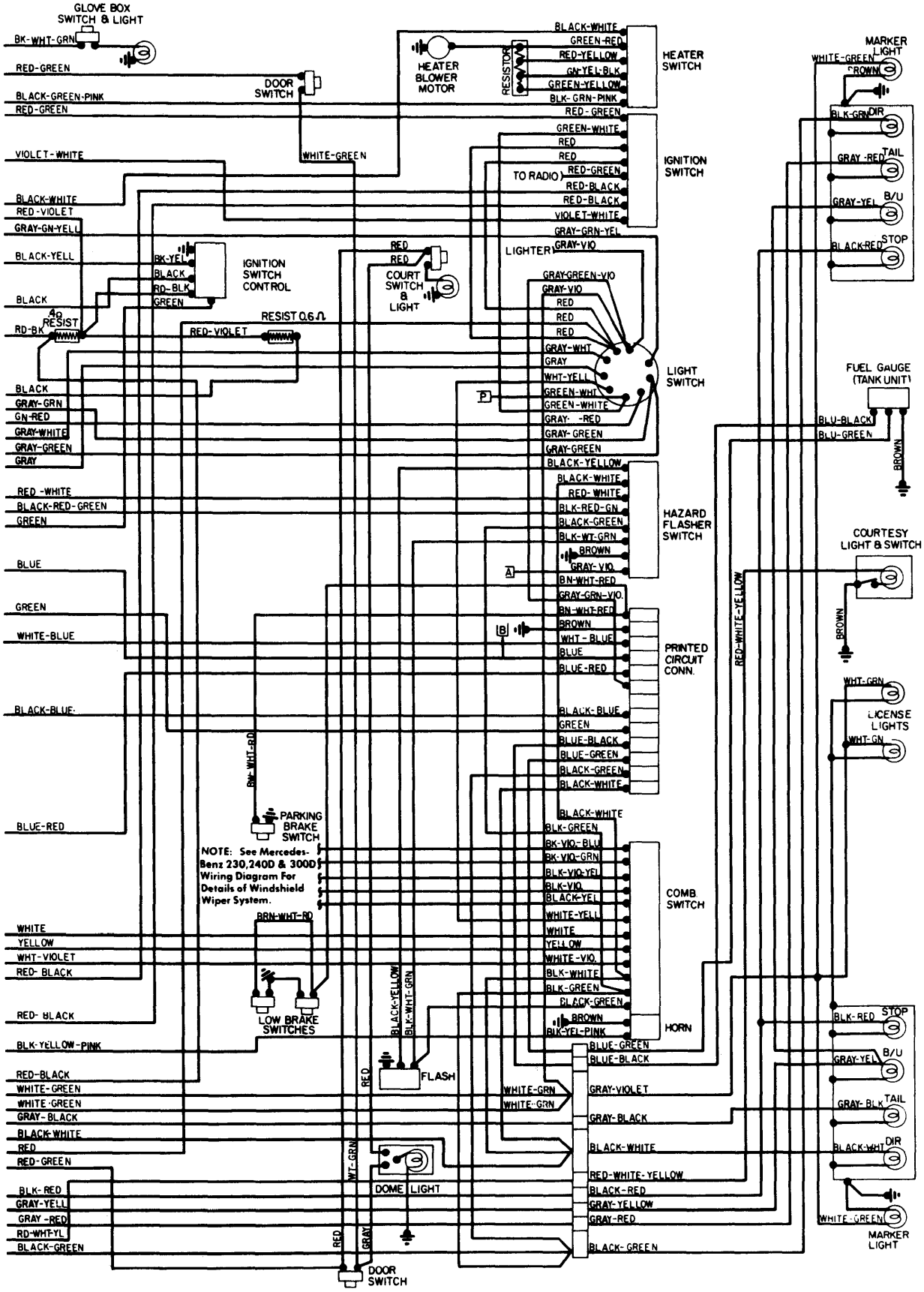

Copyright (c) 2001 Mitchell Repair Information Company