1975 Toyota

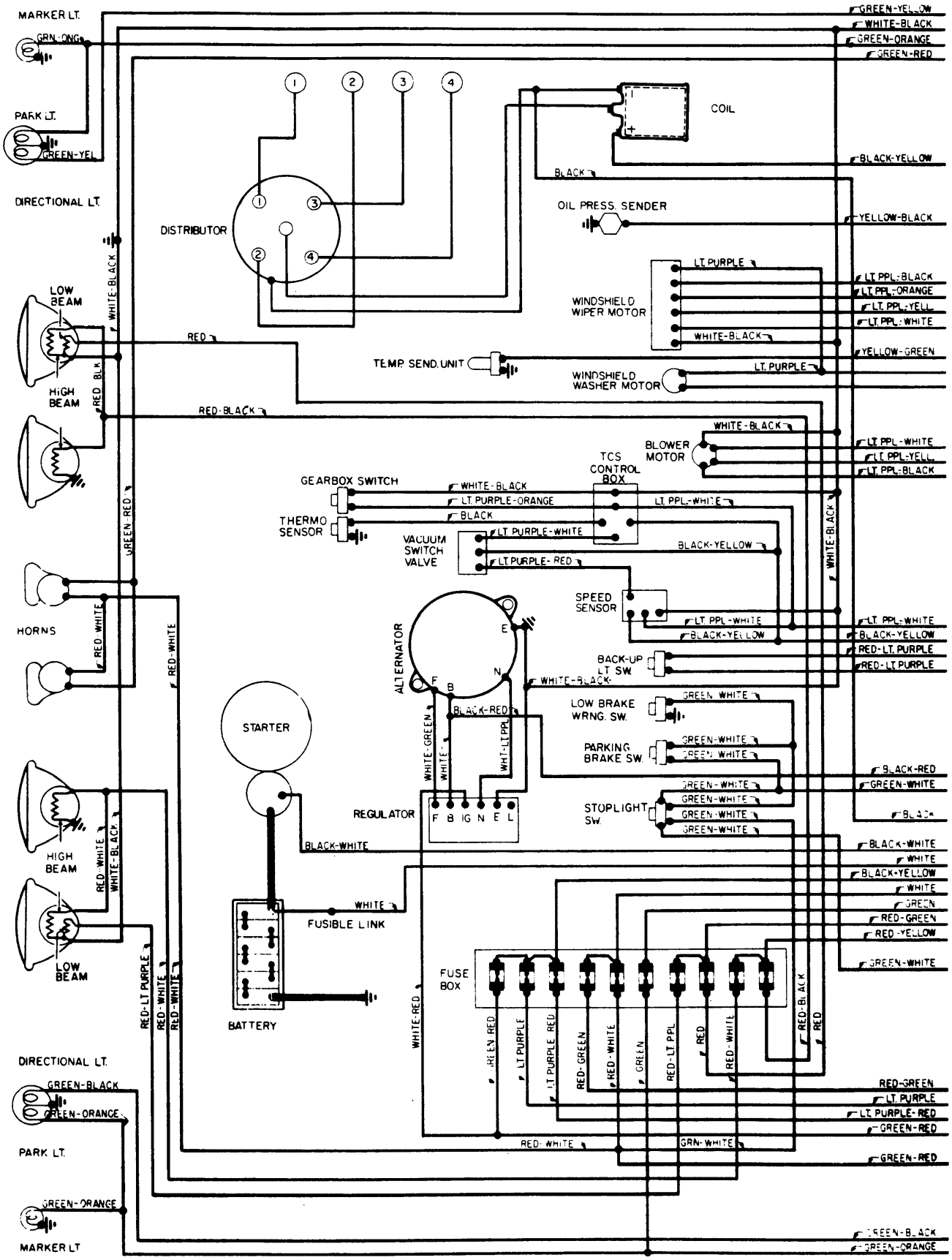
MARKER LT.
GRN-ORNG
PARK LT.
GREEN-YEL
DIRECTIONAL LT.
LOW BEAM
HIGH BEAM
HORNS
HIGH BEAM
LOW BEAM
DIRECTIONAL LT.
GREEN-BLACK
GREEN-ORANGE
PARK LT.
GREEN-ORANGE
MARKER LT
DISTRIBUTOR
COIL
BLACK
OIL PRESS. SENDER
WINDSHIELD WIPER MOTOR
TEMP. SEND. UNIT
WINDSHIELD WASHER MOTOR
BLOWER MOTOR
TCS CONTROL BOX
GEARBOX SWITCH
THERMO SENSOR
VACUUM SWITCH VALVE
SPEED SENSOR
ALTERNATOR
BACK-UP LT. SW.
LOW BRAKE WRNG. SW.
PARKING BRAKE SW.
STOPLIGHT SW.
STARTER
REGULATOR
F B IG N E L
FUSIBLE LINK
BATTERY
FUSE BOX
GREEN-YELLOW
WHITE-BLACK
GREEN-ORANGE
GREEN-RED
BLACK-YELLOW
YELLOW-BLACK
LT. PURPLE
LT. PPL.-BLACK
LT. PPL.-ORANGE
LT. PPL.-YELL.
LT. PPL.-WHITE
YELLOW-GREEN
WHITE-BLACK
LT. PURPLE-ORANGE
LT. PURPLE-WHITE
LT. PURPLE-RED
BLACK-YELLOW
LT. PPL.-WHITE
BLACK-RED
GREEN-WHITE
BLACK
BLACK-WHITE
WHITE
BLACK-YELLOW
WHITE
GREEN
RED-GREEN
RED-YELLOW
GREEN-WHITE
RED-GREEN
LT. PURPLE
LT. PURPLE-RED
GREEN-RED
GREEN-RED
GREEN-BLACK
GREEN-ORANGE
RED
WHITE-RED
RED-WHITE
GRN-WHITE
RED-LT. PURPLE

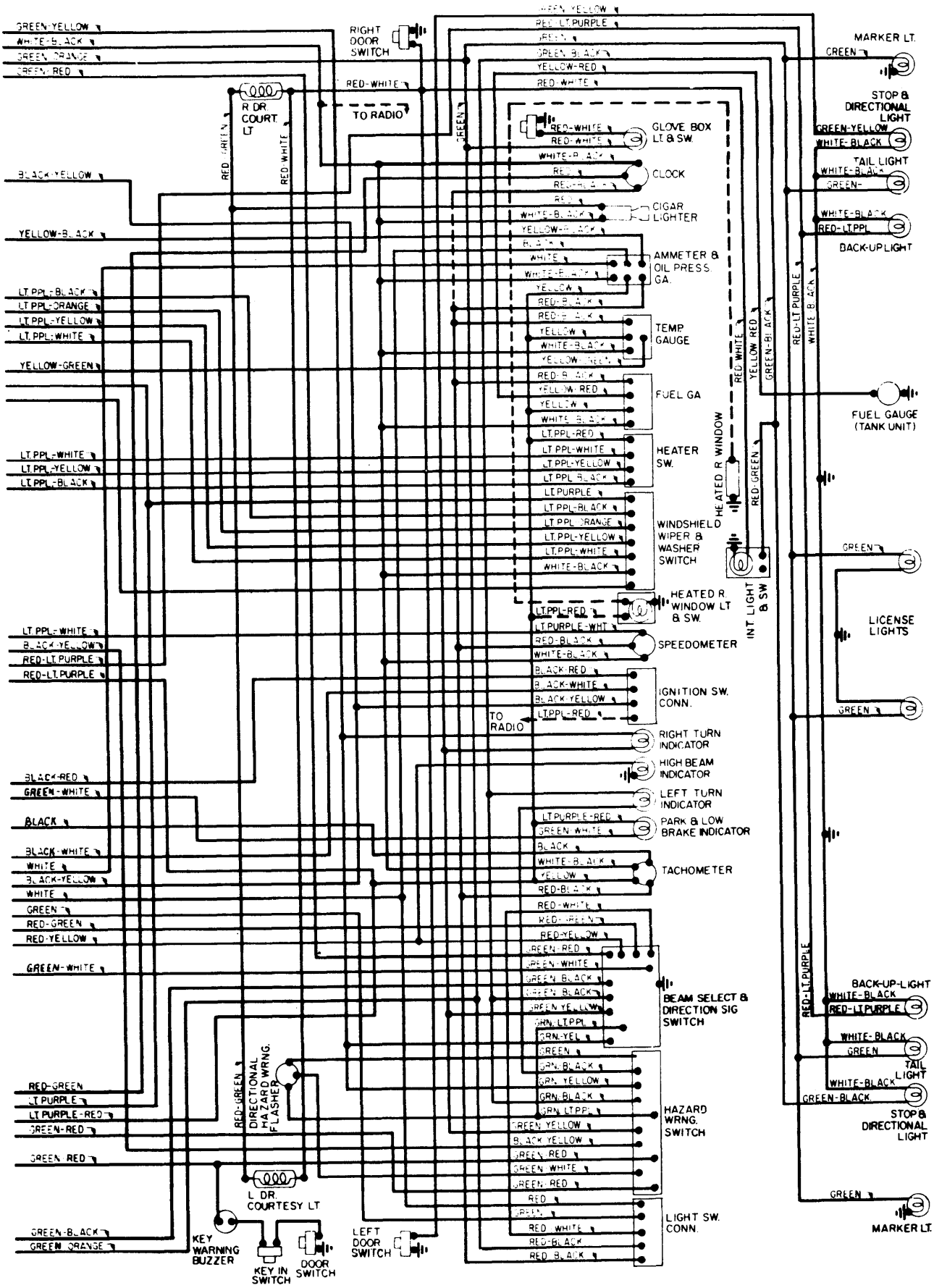
RIGHT DOOR SWITCH
R DR. COURT. LT
TO RADIO
GLOVE BOX LT & SW.
CLOCK
CIGAR LIGHTER
AMMETER & OIL PRESS. GA.
TEMP. GAUGE
FUEL GA
HEATER SW.
WINDSHIELD WIPER & WASHER SWITCH
HEATED R. WINDOW
HEATED R. WINDOW LT & SW.
INT LIGHT & SW
SPEEDOMETER
IGNITION SW. CONN.
TO RADIO
RIGHT TURN INDICATOR
HIGH BEAM INDICATOR
LEFT TURN INDICATOR
PARK & LOW BRAKE INDICATOR
TACHOMETER
BEAM SELECT & DIRECTION SIG SWITCH
HAZARD WRNG. SWITCH
LIGHT SW. CONN.
DIRECTIONAL HAZARD WRNG. FLASHER
L DR. COURTESY LT
KEY WARNING BUZZER
KEY IN SWITCH
DOOR SWITCH
LEFT DOOR SWITCH
MARKER LT.
STOP & DIRECTIONAL LIGHT
TAIL LIGHT
BACK-UP LIGHT
FUEL GAUGE (TANK UNIT)
LICENSE LIGHTS
BACK-UP-LIGHT
TAIL LIGHT
STOP & DIRECTIONAL LIGHT
MARKER LT.