1975 Subaru

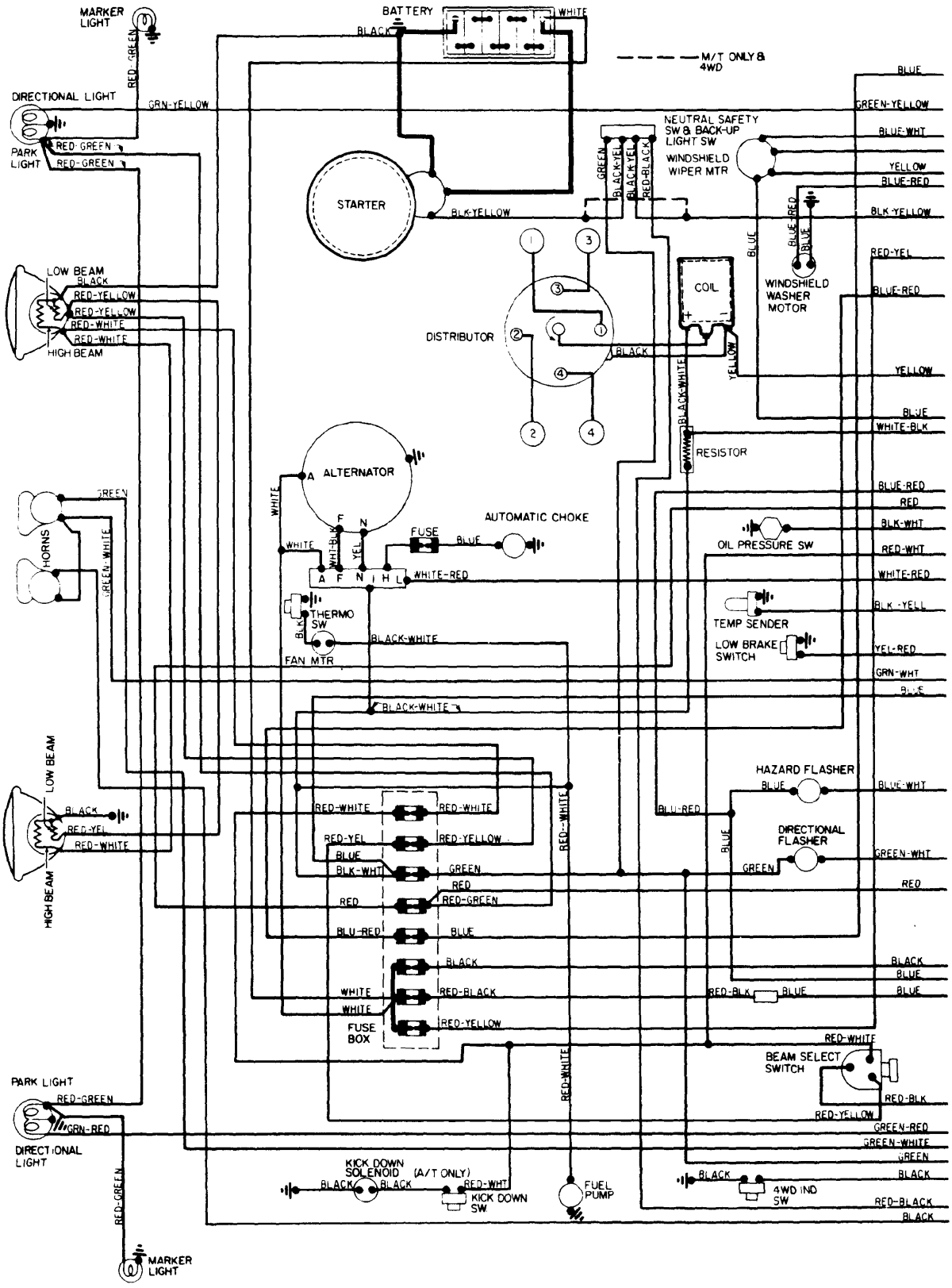
MARKER LIGHT
RED-GREEN
DIRECTIONAL LIGHT
GRN-YELLOW
PARK LIGHT
RED-GREEN
RED-GREEN
BATTERY
BLACK
WHITE
M/T ONLY & 4WD
BLUE
GREEN-YELLOW
BLUE-WHT
YELLOW
BLUE-RED
BLK-YELLOW
NEUTRAL SAFETY SW & BACK-UP LIGHT SW
WINDSHIELD WIPER MTR
GREEN
BLACK-YEL
BLACK-YEL
RED-BLACK
STARTER
BLK-YELLOW
BLUE
BLUE-RED
BLUE
WINDSHIELD WASHER MOTOR
RED-YEL
BLUE-RED
LOW BEAM
BLACK
RED-YELLOW
RED-YELLOW
RED-WHITE
RED-WHITE
HIGH BEAM
DISTRIBUTOR
BLACK
COIL
YELLOW
BLACK-WHITE
YELLOW
BLUE
WHITE-BLK
RESISTOR
ALTERNATOR
WHITE
GREEN
HORNS
GREEN-WHITE
AUTOMATIC CHOKE
FUSE
BLUE
WHITE
WHT-BLK
YEL
A F N I H L
WHITE-RED
THERMO SW
BLK
BLACK-WHITE
FAN MTR
BLUE-RED
RED
BLK-WHT
RED-WHT
WHITE-RED
OIL PRESSURE SW
BLK-YELL
TEMP SENDER
LOW BRAKE SWITCH
YEL-RED
GRN-WHT
BLUE
BLACK-WHITE
LOW BEAM
BLACK
RED-YEL
RED-WHITE
HIGH BEAM
HAZARD FLASHER
BLUE
BLUE-WHT
RED-WHITE
RED-WHITE
RED-YEL
RED-YELLOW
BLUE
BLK-WHT
GREEN
RED
RED
RED-GREEN
BLU-RED
BLUE
DIRECTIONAL FLASHER
GREEN
GREEN-WHT
RED
BLACK
BLUE
BLUE
WHITE
RED-BLACK
WHITE
RED-YELLOW
FUSE BOX
RED-BLK
BLUE
RED-WHITE
BEAM SELECT SWITCH
RED-BLK
RED-YELLOW
PARK LIGHT
RED-GREEN
GRN-RED
DIRECTIONAL LIGHT
GREEN-RED
GREEN-WHITE
GREEN
KICK DOWN SOLENOID (A/T ONLY)
BLACK
BLACK
RED-WHT
KICK DOWN SW.
FUEL PUMP
BLACK
4WD IND SW
BLACK
RED-BLACK
BLACK
RED-GREEN
MARKER LIGHT

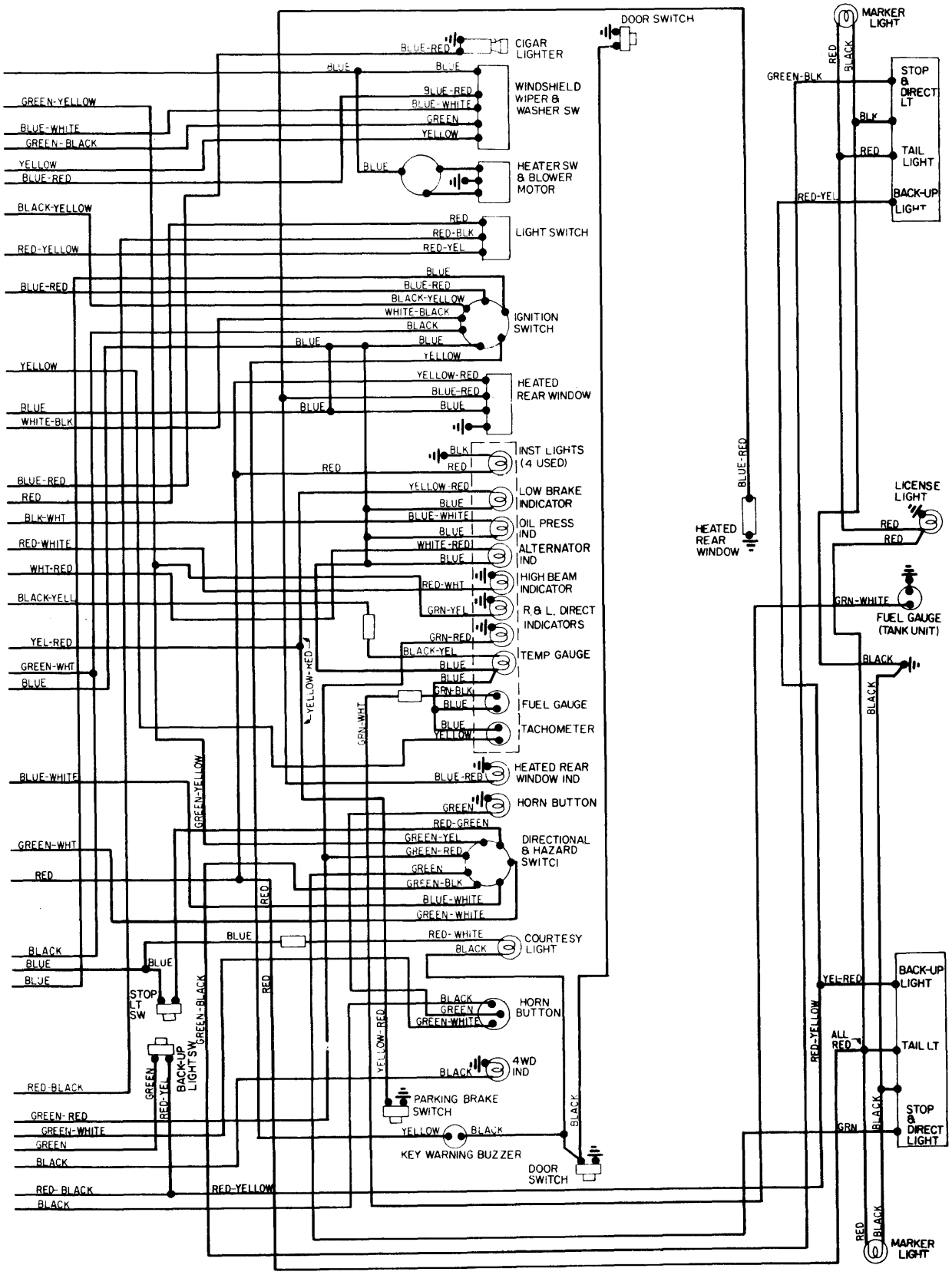
DOOR SWITCH
MARKER LIGHT
CIGAR LIGHTER
WINDSHIELD WIPER & WASHER SW
HEATER SW & BLOWER MOTOR
LIGHT SWITCH
IGNITION SWITCH
HEATED REAR WINDOW
INST LIGHTS (4 USED)
LOW BRAKE INDICATOR
OIL PRESS IND
ALTERNATOR IND
HIGH BEAM INDICATOR
R.& L. DIRECT INDICATORS
TEMP GAUGE
FUEL GAUGE
TACHOMETER
HEATED REAR WINDOW IND
HORN BUTTON
DIRECTIONAL & HAZARD SWITCH
COURTESY LIGHT
HORN BUTTON
4WD IND
PARKING BRAKE SWITCH
KEY WARNING BUZZER
DOOR SWITCH
STOP & DIRECT LT
TAIL LIGHT
BACK-UP LIGHT
LICENSE LIGHT
FUEL GAUGE (TANK UNIT)
BACK-UP LIGHT
TAIL LT
STOP & DIRECT LIGHT
MARKER LIGHT
STOP LT SW
BACK-UP LIGHT SW
GREEN-YELLOW
BLUE-WHITE
GREEN-BLACK
YELLOW
BLUE-RED
BLACK-YELLOW
RED-YELLOW
BLUE-RED
YELLOW
BLUE
WHITE-BLK
BLUE-RED
RED
BLK-WHT
RED-WHITE
WHT-RED
BLACK-YELL
YEL-RED
GREEN-WHT
BLUE
BLUE-WHITE
GREEN-WHT
RED
BLACK
BLUE
BLUE
RED-BLACK
GREEN-RED
GREEN-WHITE
GREEN
BLACK
RED-BLACK
BLACK
BLUE-RED
HEATED REAR WINDOW
GREEN-BLK
RED-YEL
LICENSE LIGHT
GRN-WHITE
BLACK
YEL-RED
ALL RED
GRN
RED-YELLOW
YELLOW-RED
GRN-WHT
GREEN-YELLOW
GREEN-BLACK
RED-YELLOW