1975 Porsche

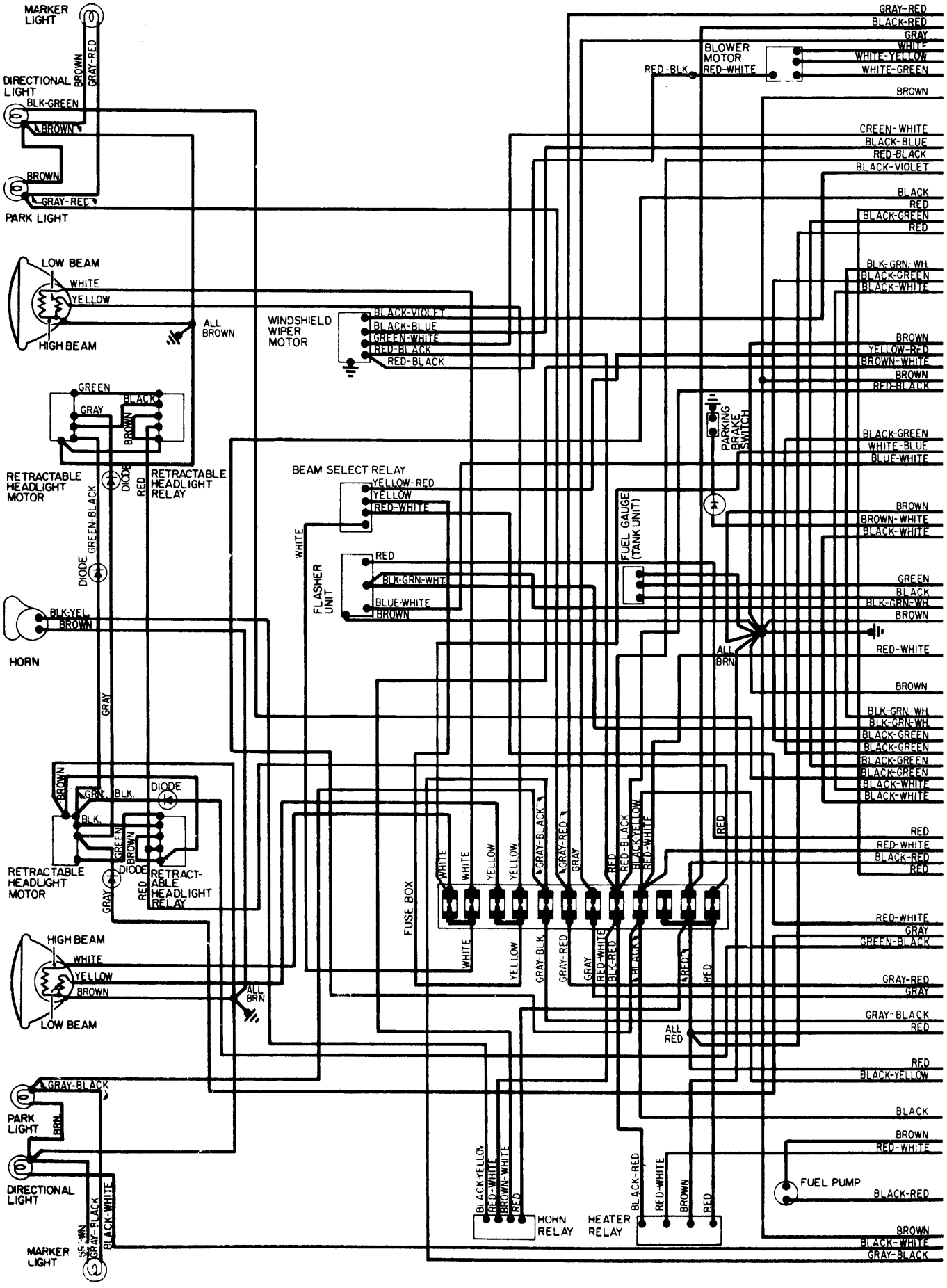

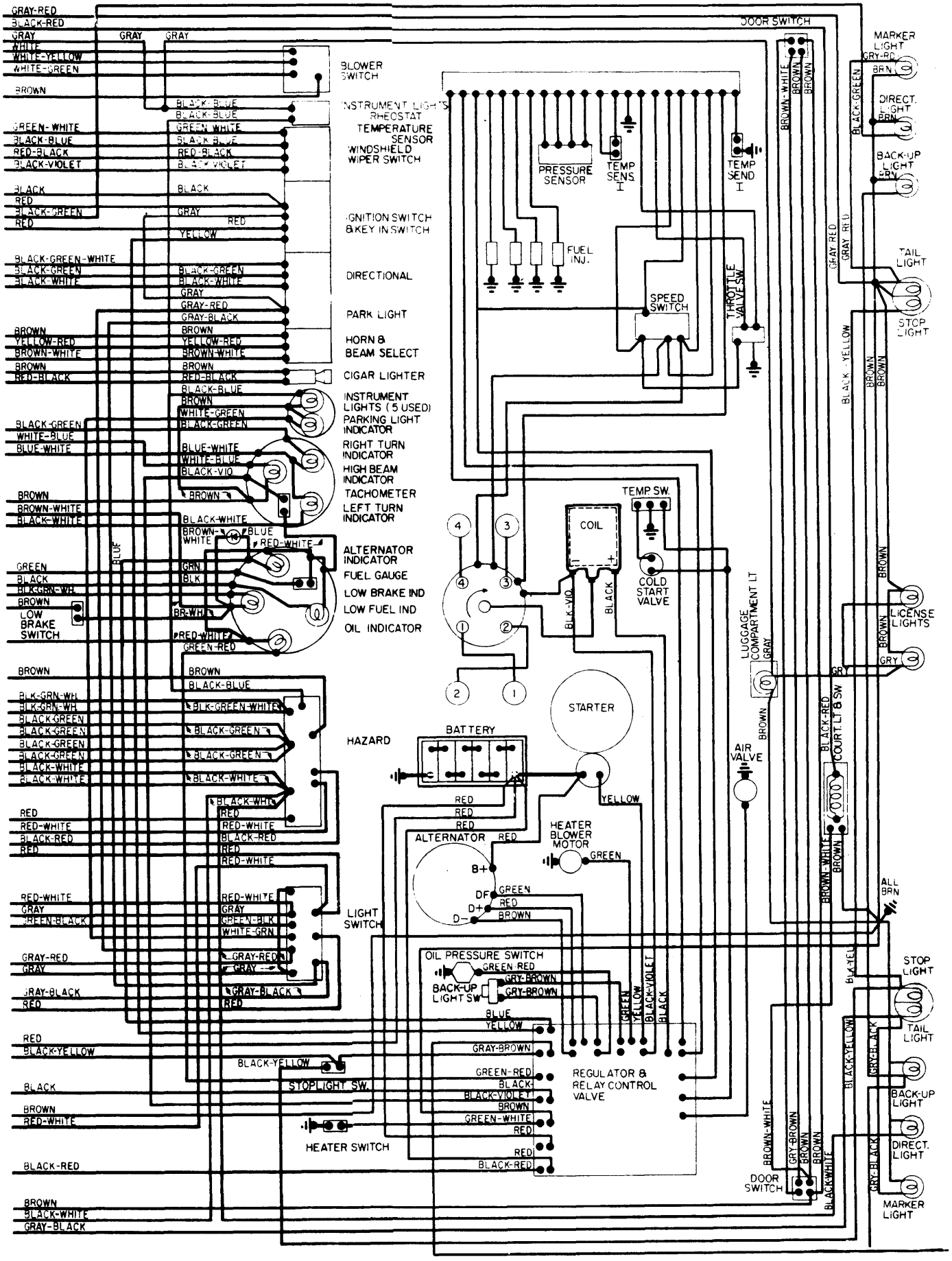
BLOWER SWITCH
INSTRUMENT LIGHTS RHEOSTAT
TEMPERATURE SENSOR
WINDSHIELD WIPER SWITCH
IGNITION SWITCH & KEY IN SWITCH
DIRECTIONAL
PARK LIGHT
HORN & BEAM SELECT
CIGAR LIGHTER
INSTRUMENT LIGHTS (5 USED)
PARKING LIGHT INDICATOR
RIGHT TURN INDICATOR
HIGH BEAM INDICATOR
TACHOMETER
LEFT TURN INDICATOR
ALTERNATOR INDICATOR
FUEL GAUGE
LOW BRAKE IND
LOW FUEL IND
OIL INDICATOR
LOW BRAKE SWITCH
HAZARD
LIGHT SWITCH
STOPLIGHT SW.
HEATER SWITCH
DOOR SWITCH
PRESSURE SENSOR
TEMP SENS I
TEMP SEND I
FUEL INJ.
SPEED SWITCH
THROTTLE VALVE SW
TEMP. SW.
COIL
COLD START VALVE
STARTER
BATTERY
ALTERNATOR
HEATER BLOWER MOTOR
LUGGAGE COMPARTMENT LT
AIR VALVE
COURT. LT & SW
OIL PRESSURE SWITCH
BACK-UP LIGHT SW
REGULATOR & RELAY CONTROL VALVE
MARKER LIGHT
DIRECT. LIGHT
BACK-UP LIGHT
TAIL LIGHT
STOP LIGHT
LICENSE LIGHTS
ALL BRN