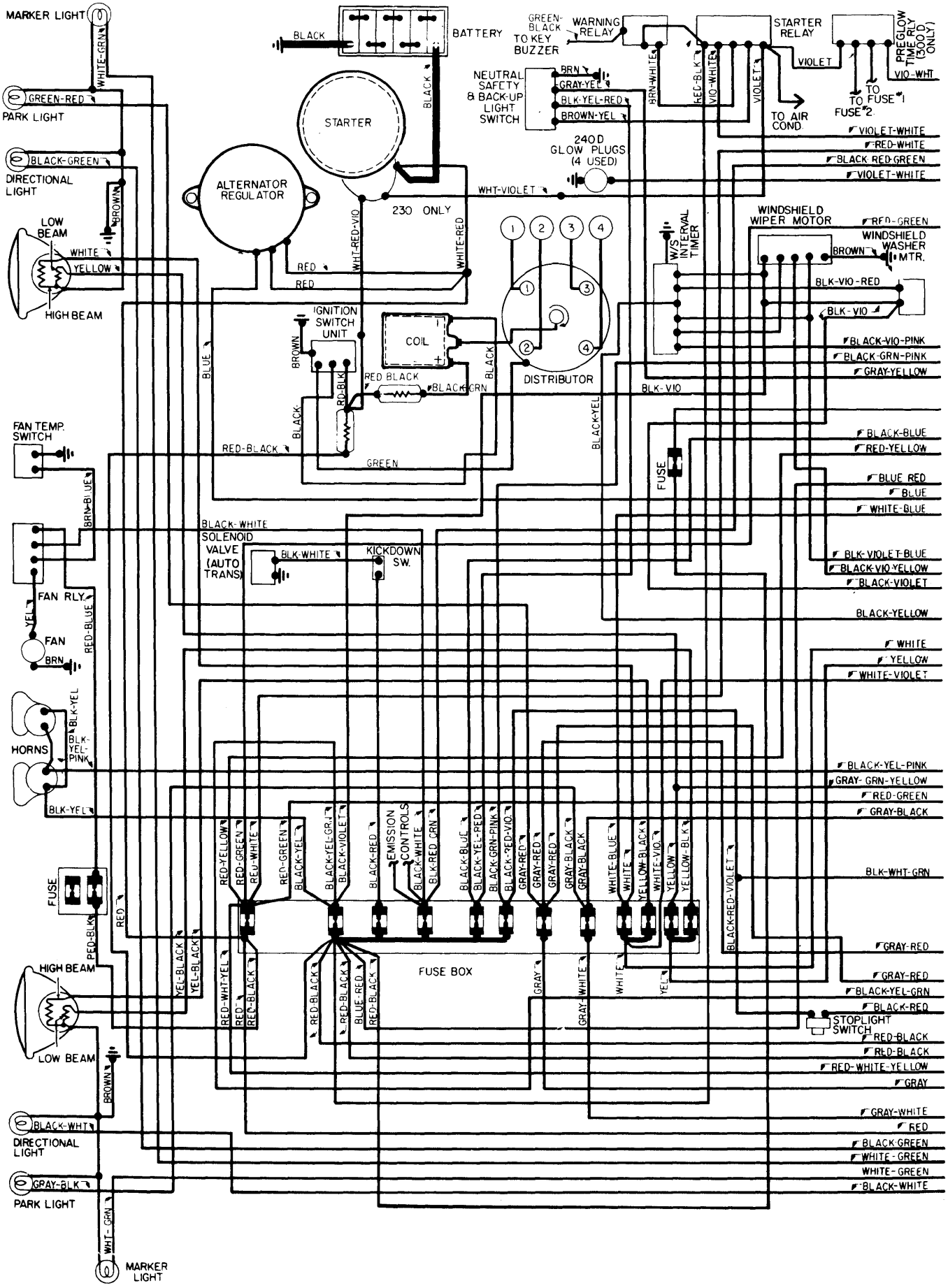
MARKER LIGHT
WHITE-GRN
GREEN-RED
PARK LIGHT
BLACK-GREEN
DIRECTIONAL LIGHT
BROWN
LOW BEAM
WHITE
YELLOW
HIGH BEAM
BLACK
BATTERY
STARTER
ALTERNATOR REGULATOR
230 ONLY
WHT-RED-VIO
WHITE-RED
RED
GREEN-BLACK
TO KEY BUZZER
WARNING RELAY
NEUTRAL SAFETY & BACK-UP LIGHT SWITCH
BRN
GRAY-YEL
BLK-YEL-RED
BROWN-YEL
240D GLOW PLUGS (4 USED)
WHT-VIOLET
BRN-WHITE
RED-BLK
VIO-WHITE
VIOLET
STARTER RELAY
PREGLOW TIME RLY (300D ONLY)
VIO-WHT
TO FUSE #1
TO FUSE #2
TO AIR COND.
VIOLET-WHITE
RED-WHITE
BLACK-RED-GREEN
VIOLET-WHITE
WINDSHIELD WIPER MOTOR
RED-GREEN
WINDSHIELD WASHER MTR.
W/S INTERVAL TIMER
BLK-VIO-RED
BLK-VIO
BLACK-VIO-PINK
BLACK-GRN-PINK
GRAY-YELLOW
IGNITION SWITCH UNIT
COIL
DISTRIBUTOR
RED BLACK
BLACK-GRN
BLK-VIO
BLACK-YEL
BLUE
RD-BLK
RED-BLACK
GREEN
FUSE
BLACK-BLUE
RED-YELLOW
BLUE RED
BLUE
WHITE-BLUE
FAN TEMP. SWITCH
BRN-BLUE
BLACK-WHITE
SOLENOID VALVE (AUTO TRANS)
BLK-WHITE
KICKDOWN SW.
BLK-VIOLET-BLUE
BLACK-VIO-YELLOW
BLACK-VIOLET
FAN RLY.
YEL
RED-BLUE
FAN
BRN
BLACK-YELLOW
WHITE
YELLOW
WHITE-VIOLET
HORNS
BLK-YEL
BLK-YEL-PINK
BLACK-YEL-PINK
GRAY-GRN-YELLOW
RED-GREEN
GRAY-BLACK
RED-YELLOW
RED-GREEN
RED-WHITE
RED-GREEN
BLACK-YEL
BLACK-YEL-GRN
BLACK-VIOLET
BLACK-RED
EMISSION CONTROLS
BLACK-WHITE
BLK-RED-GRN
BLACK-BLUE
BLACK-YEL-RED
BLACK-GRN-PINK
BLACK-RED-VIO
GRAY-RED
GRAY-RED
GRAY-BLACK
GRAY-BLACK
WHITE-BLUE
WHITE
YELLOW-BLACK
WHITE-VIO
YELLOW
YELLOW-BLK
BLK-WHT-GRN
FUSE
RED
RED-BLK
YEL-BLACK
YEL-BLACK
RED-WHT-YEL
RED
RED-BLACK
RED-BLACK
RED-BLACK
BLUE-RED
RED-BLACK
FUSE BOX
GRAY
GRAY-WHITE
WHITE
YEL
BLACK-RED-VIOLET
GRAY-RED
GRAY-RED
BLACK-YEL-GRN
BLACK-RED
STOPLIGHT SWITCH
RED-BLACK
RED-BLACK
RED-WHITE-YELLOW
GRAY
HIGH BEAM
LOW BEAM
BROWN
BLACK-WHT
DIRECTIONAL LIGHT
GRAY-WHITE
RED
BLACK-GREEN
WHITE-GREEN
WHITE-GREEN
BLACK-WHITE
GRAY-BLK
PARK LIGHT
WHT-GRN
MARKER LIGHT

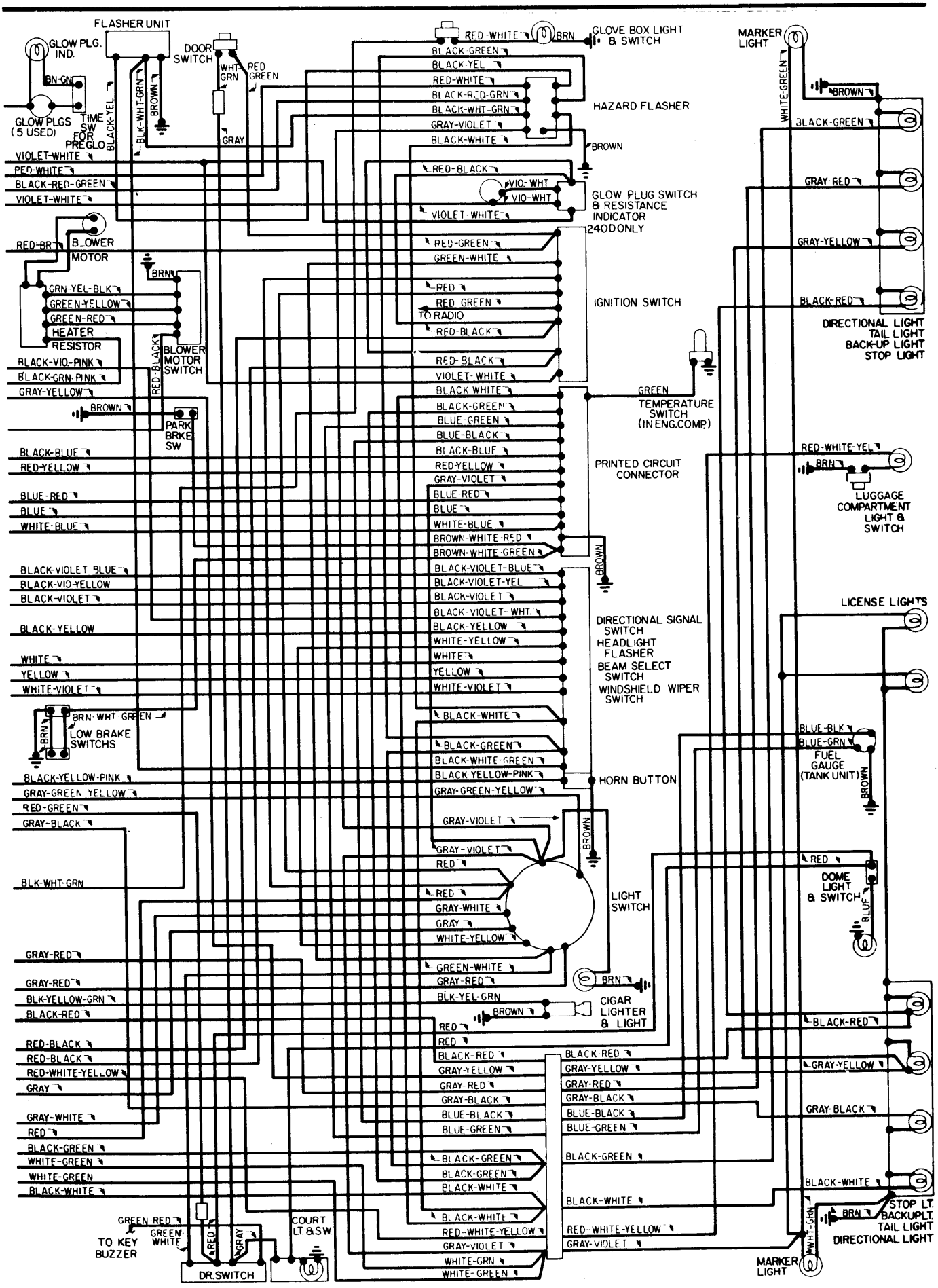
FLASHER UNIT
GLOW PLG. IND.
BN-GN
GLOW PLGS (5 USED)
TIME SW FOR PREGLO
BLACK-YEL
BLK-WHT-GRN
BROWN
DOOR SWITCH
WHT-GRN
RED GREEN
GRAY
VIOLET-WHITE
RED-WHITE
BLACK-RED-GREEN
VIOLET-WHITE
RED-BR
BLOWER MOTOR
BRN
GRN-YEL-BLK
GREEN-YELLOW
GREEN-RED
HEATER RESISTOR
BLOWER MOTOR SWITCH
RED-BLACK
BLACK-VIO-PINK
BLACK-GRN-PINK
GRAY-YELLOW
BROWN
PARK BRKE SW
BLACK-BLUE
RED-YELLOW
BLUE-RED
BLUE
WHITE-BLUE
BLACK-VIOLET BLUE
BLACK-VIO-YELLOW
BLACK-VIOLET
BLACK-YELLOW
WHITE
YELLOW
WHITE-VIOLET
BRN-WHT-GREEN
LOW BRAKE SWITCHS
BLACK-YELLOW-PINK
GRAY-GREEN YELLOW
RED-GREEN
GRAY-BLACK
BLK-WHT-GRN
GRAY-RED
GRAY-RED
BLK-YELLOW-GRN
BLACK-RED
RED-BLACK
RED-BLACK
RED-WHITE-YELLOW
GRAY
GRAY-WHITE
RED
BLACK-GREEN
WHITE-GREEN
WHITE-GREEN
BLACK-WHITE
GREEN-RED
GREEN-WHITE
TO KEY BUZZER
RED
GRAY
DR.SWITCH
COURT LT.&SW.
RED-WHITE
BRN
GLOVE BOX LIGHT & SWITCH
BLACK-GREEN
BLACK-YEL
RED-WHITE
BLACK-RED-GRN
BLACK-WHT-GRN
GRAY-VIOLET
BLACK-WHITE
HAZARD FLASHER
BROWN
RED-BLACK
VIO-WHT
VIO-WHT
VIOLET-WHITE
GLOW PLUG SWITCH & RESISTANCE INDICATOR 240D ONLY
RED-GREEN
GREEN-WHITE
RED
RED GREEN
TO RADIO
RED-BLACK
IGNITION SWITCH
RED-BLACK
VIOLET-WHITE
BLACK-WHITE
BLACK-GREEN
BLUE-GREEN
BLUE-BLACK
BLACK-BLUE
RED-YELLOW
GRAY-VIOLET
BLUE-RED
BLUE
WHITE-BLUE
BROWN-WHITE-RED
BROWN-WHITE-GREEN
GREEN
TEMPERATURE SWITCH (IN ENG.COMP.)
PRINTED CIRCUIT CONNECTOR
BROWN
BLACK-VIOLET-BLUE
BLACK-VIOLET-YEL
BLACK-VIOLET
BLACK-VIOLET-WHT.
BLACK-YELLOW
WHITE-YELLOW
WHITE
YELLOW
WHITE-VIOLET
DIRECTIONAL SIGNAL SWITCH
HEADLIGHT FLASHER
BEAM SELECT SWITCH
WINDSHIELD WIPER SWITCH
BLACK-WHITE
BLACK-GREEN
BLACK-WHITE-GREEN
BLACK-YELLOW-PINK
GRAY-GREEN-YELLOW
HORN BUTTON
GRAY-VIOLET
GRAY-VIOLET
RED
BROWN
RED
GRAY-WHITE
GRAY
WHITE-YELLOW
LIGHT SWITCH
GREEN-WHITE
GRAY-RED
BLK-YEL-GRN
BRN
CIGAR LIGHTER & LIGHT
BROWN
RED
RED
BLACK-RED
GRAY-YELLOW
GRAY-RED
GRAY-BLACK
BLUE-BLACK
BLUE-GREEN
BLACK-GREEN
BLACK-GREEN
BLACK-WHITE
BLACK-WHITE
RED-WHITE-YELLOW
GRAY-VIOLET
WHITE-GRN
WHITE-GREEN
BLACK-RED
GRAY-YELLOW
GRAY-RED
GRAY-BLACK
BLUE-BLACK
BLUE-GREEN
BLACK-GREEN
BLACK-WHITE
RED-WHITE-YELLOW
GRAY-VIOLET
MARKER LIGHT
WHITE-GREEN
BROWN
BLACK-GREEN
GRAY-RED
GRAY-YELLOW
BLACK-RED
DIRECTIONAL LIGHT
TAIL LIGHT
BACK-UP LIGHT
STOP LIGHT
RED-WHITE-YEL
BRN
LUGGAGE COMPARTMENT LIGHT & SWITCH
LICENSE LIGHTS
BLUE-BLK
BLUE-GRN
FUEL GAUGE (TANK UNIT)
BROWN
RED
DOME LIGHT & SWITCH
BLUE
BLACK-RED
GRAY-YELLOW
GRAY-BLACK
BLACK-WHITE
BRN
STOP LT.
BACKUP LT.
TAIL LIGHT
DIRECTIONAL LIGHT
WHT-GRN
MARKER LIGHT