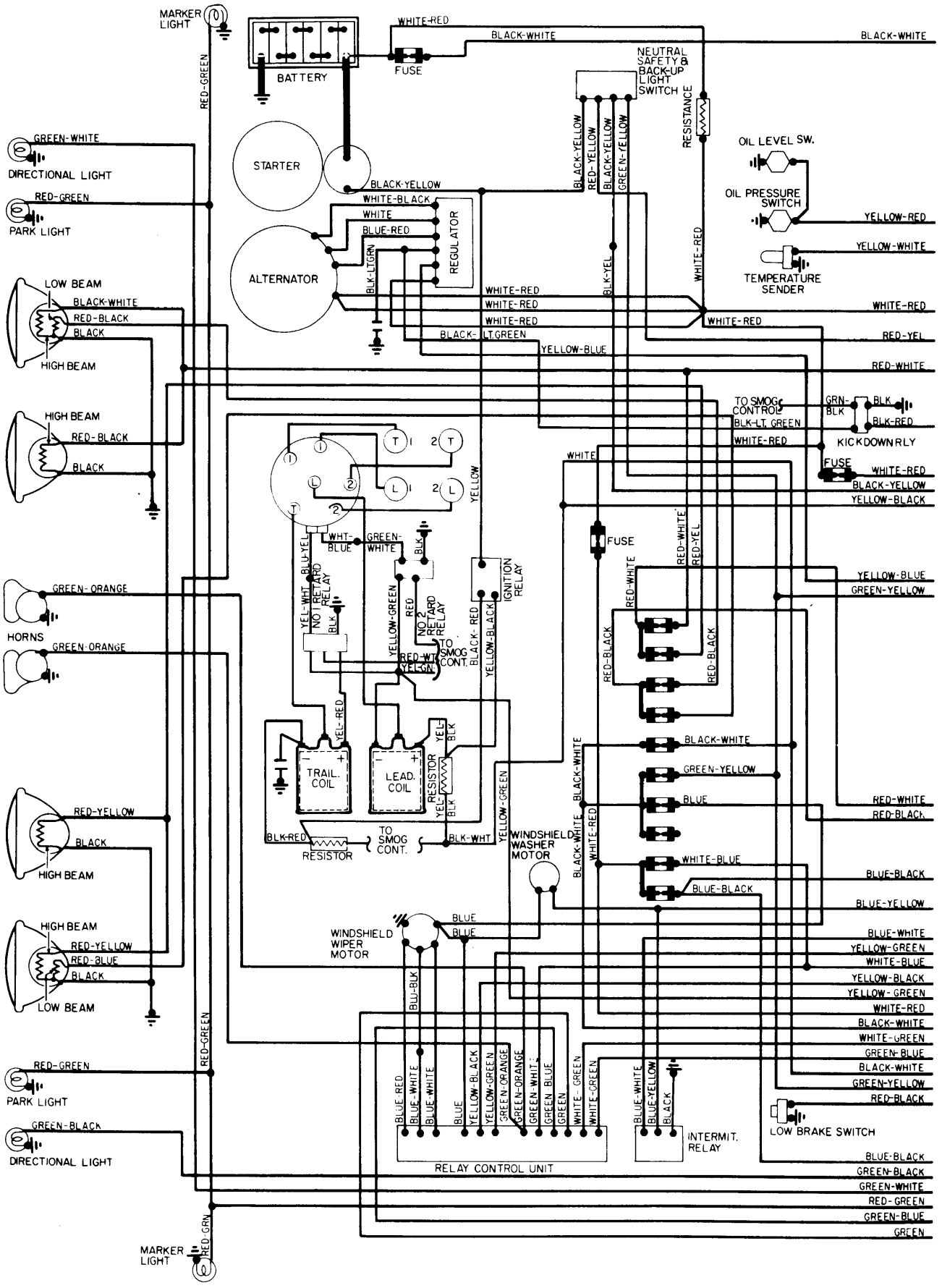
MARKER LIGHT
BATTERY
FUSE
WHITE-RED
BLACK-WHITE
NEUTRAL SAFETY & BACK-UP LIGHT SWITCH
RESISTANCE
OIL LEVEL SW.
OIL PRESSURE SWITCH
TEMPERATURE SENDER
YELLOW-RED
YELLOW-WHITE
STARTER
ALTERNATOR
REGULATOR
BLACK-YELLOW
WHITE-BLACK
WHITE
BLUE-RED
BLK-LTGRN
BLACK-YELLOW
RED-YELLOW
BLACK-YELLOW
GREEN-YELLOW
BLK-YEL
WHITE-RED
BLACK-LT.GREEN
YELLOW-BLUE
RED-YEL
RED-WHITE
GREEN-WHITE
DIRECTIONAL LIGHT
RED-GREEN
PARK LIGHT
LOW BEAM
BLACK-WHITE
RED-BLACK
BLACK
HIGH BEAM
TO SMOG CONTROL
GRN-BLK
BLK
BLK-RED
KICKDOWN RLY
BLK-LT. GREEN
WHITE-RED
FUSE
BLACK-YELLOW
YELLOW-BLACK
YELLOW
WHITE
WHT-BLUE
GREEN-WHITE
BLU-YEL
YEL-WHT
NO 1 RETARD RELAY
YELLOW-GREEN
RED
NO 2 RETARD RELAY
TO SMOG CONT.
RED-WT
YEL-GN
BLACK-RED
YELLOW-BLACK
IGNITION RELAY
RED-WHITE
RED-YEL
YELLOW-BLUE
GREEN-YELLOW
GREEN-ORANGE
HORNS
YEL-RED
TRAIL. COIL
LEAD. COIL
RESISTOR
YEL-BLK
BLACK-WHITE
GREEN-YELLOW
BLUE
RED-WHITE
RED-BLACK
RED-YELLOW
BLK-RED
RESISTOR
TO SMOG CONT.
BLK-WHT
YELLOW-GREEN
WINDSHIELD WASHER MOTOR
WHITE-BLUE
BLUE-BLACK
BLUE-YELLOW
WINDSHIELD WIPER MOTOR
BLUE
BLU-BLK
BLUE-WHITE
YELLOW-GREEN
WHITE-BLUE
YELLOW-BLACK
YELLOW-GREEN
WHITE-RED
BLACK-WHITE
WHITE-GREEN
GREEN-BLUE
BLACK-WHITE
GREEN-YELLOW
RED-BLACK
LOW BRAKE SWITCH
BLUE-RED
BLUE-WHITE
BLUE-WHITE
BLUE
YELLOW-BLACK
YELLOW-GREEN
GREEN-ORANGE
GREEN-ORANGE
GREEN-WHITE
GREEN-BLUE
GREEN
WHITE-GREEN
BLUE-WHITE
BLUE-YELLOW
BLACK
INTERMIT. RELAY
RELAY CONTROL UNIT
BLUE-BLACK
GREEN-BLACK
GREEN-WHITE
RED-GREEN
GREEN-BLUE
GREEN
MARKER LIGHT
RED-GRN

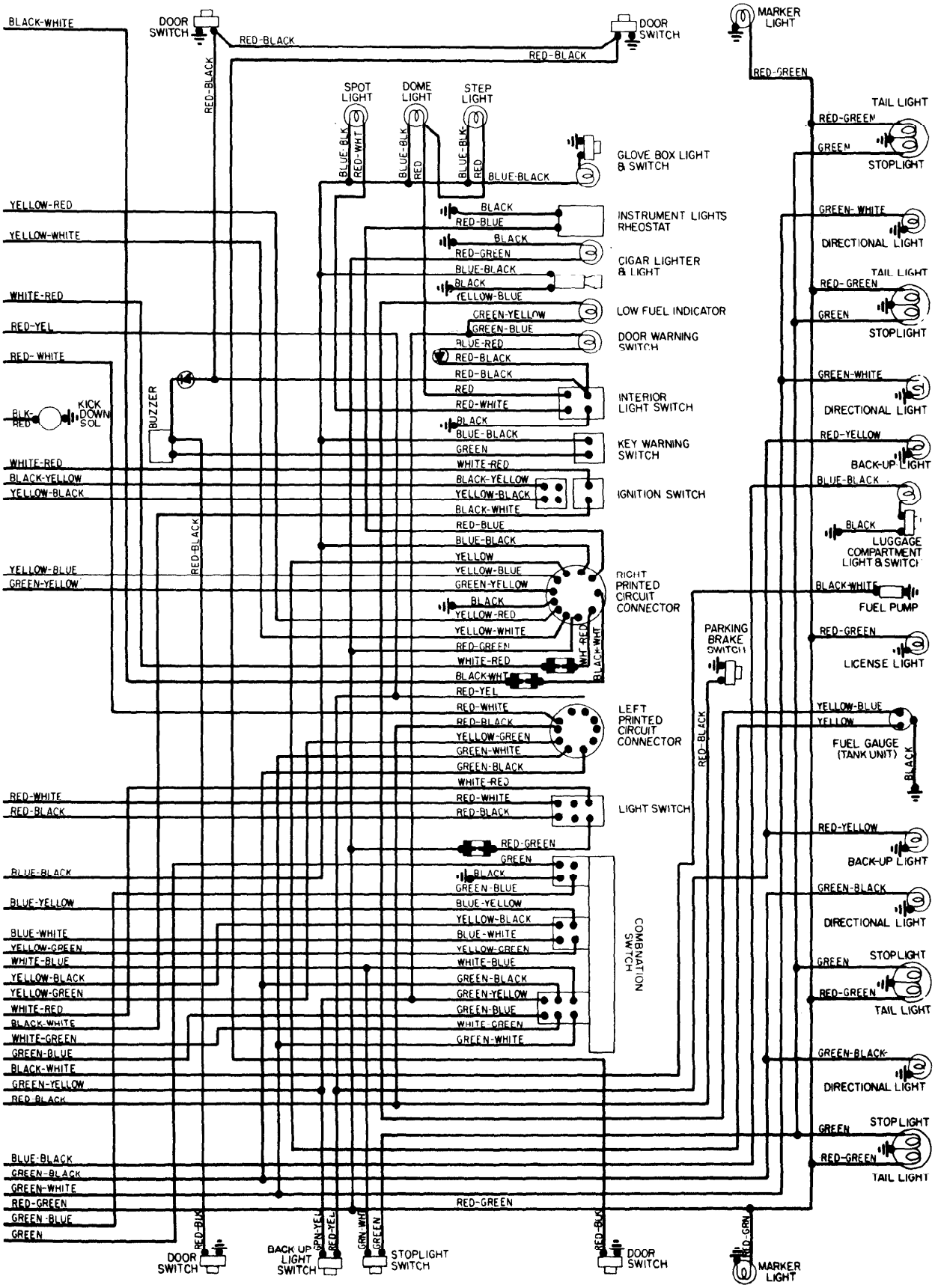
DOOR SWITCH
RED-BLACK
DOOR SWITCH
MARKER LIGHT
RED-GREEN
SPOT LIGHT
DOME LIGHT
STEP LIGHT
BLUE-BLK
RED-WHT
BLUE-BLK
RED
BLUE-BLK
RED
BLUE-BLACK
GLOVE BOX LIGHT & SWITCH
TAIL LIGHT
RED-GREEN
GREEN
STOPLIGHT
YELLOW-RED
YELLOW-WHITE
WHITE-RED
RED-YEL
RED-WHITE
BLK-RED
KICK DOWN SOL
BUZZER
WHITE-RED
BLACK-YELLOW
YELLOW-BLACK
YELLOW-BLUE
GREEN-YELLOW
RED-BLACK
BLACK
RED-BLUE
BLACK
RED-GREEN
BLUE-BLACK
BLACK
YELLOW-BLUE
INSTRUMENT LIGHTS RHEOSTAT
CIGAR LIGHTER & LIGHT
GREEN-YELLOW
GREEN-BLUE
BLUE-RED
LOW FUEL INDICATOR
DOOR WARNING SWITCH
RED-BLACK
RED-BLACK
RED
RED-WHITE
INTERIOR LIGHT SWITCH
BLACK
BLUE-BLACK
GREEN
WHITE-RED
KEY WARNING SWITCH
BLACK-YELLOW
YELLOW-BLACK
BLACK-WHITE
IGNITION SWITCH
RED-BLUE
BLUE-BLACK
YELLOW
YELLOW-BLUE
GREEN-YELLOW
BLACK
YELLOW-RED
YELLOW-WHITE
RED-GREEN
WHITE-RED
BLACK-WHT
RIGHT PRINTED CIRCUIT CONNECTOR
WHT-RED
BLACK-WHT
RED-YEL
RED-WHITE
RED-BLACK
YELLOW-GREEN
GREEN-WHITE
GREEN-BLACK
WHITE-RED
LEFT PRINTED CIRCUIT CONNECTOR
RED-WHITE
RED-BLACK
LIGHT SWITCH
RED-GREEN
GREEN
BLACK
GREEN-BLUE
BLUE-YELLOW
YELLOW-BLACK
BLUE-WHITE
YELLOW-GREEN
WHITE-BLUE
GREEN-BLACK
GREEN-YELLOW
GREEN-BLUE
WHITE-GREEN
GREEN-WHITE
COMBINATION SWITCH
PARKING BRAKE SWITCH
RED-BLACK
BLUE-BLACK
BLUE-YELLOW
BLUE-WHITE
YELLOW-GREEN
WHITE-BLUE
YELLOW-BLACK
YELLOW-GREEN
WHITE-RED
BLACK-WHITE
WHITE-GREEN
GREEN-BLUE
BLACK-WHITE
GREEN-YELLOW
RED-BLACK
BLUE-BLACK
GREEN-BLACK
GREEN-WHITE
RED-GREEN
GREEN-BLUE
GREEN
RED-GREEN
GREEN-WHITE
DIRECTIONAL LIGHT
TAIL LIGHT
RED-GREEN
GREEN
STOPLIGHT
GREEN-WHITE
DIRECTIONAL LIGHT
RED-YELLOW
BACK-UP LIGHT
BLUE-BLACK
BLACK
LUGGAGE COMPARTMENT LIGHT & SWITCH
BLACK-WHITE
FUEL PUMP
RED-GREEN
LICENSE LIGHT
YELLOW-BLUE
YELLOW
FUEL GAUGE (TANK UNIT)
BLACK
RED-YELLOW
BACK-UP LIGHT
GREEN-BLACK
DIRECTIONAL LIGHT
GREEN
STOPLIGHT
RED-GREEN
TAIL LIGHT
GREEN-BLACK
DIRECTIONAL LIGHT
GREEN
STOPLIGHT
RED-GREEN
TAIL LIGHT
RED-BLK
DOOR SWITCH
PRN-YEL
RED-YEL
BACK UP LIGHT SWITCH
GRN-WHT
GREEN
STOPLIGHT SWITCH
RED-BLK
DOOR SWITCH
RED-GRN
MARKER LIGHT