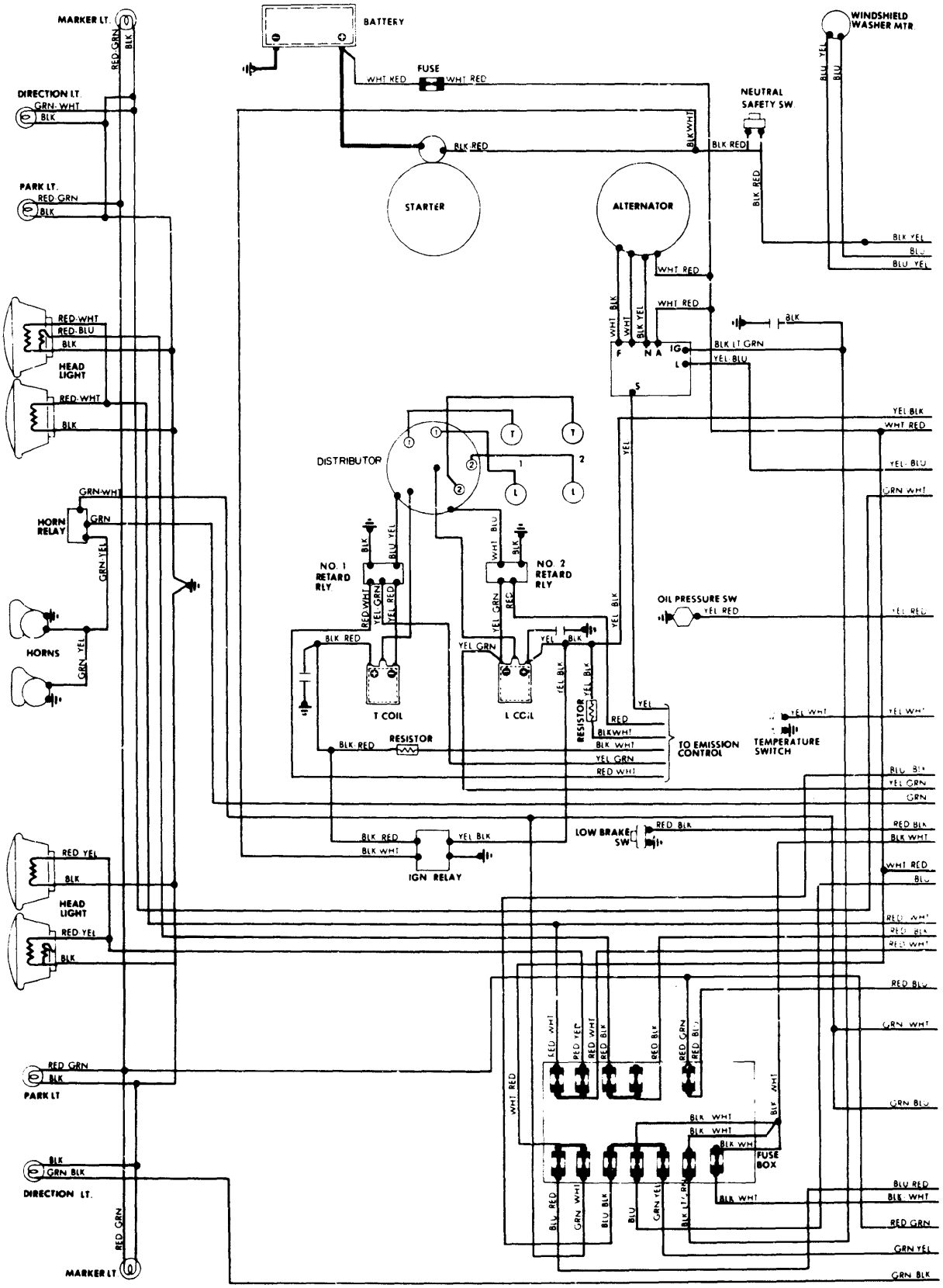
MARKER LT.
BATTERY
WINDSHIELD WASHER MTR.
FUSE
WHT RED
WHT RED
NEUTRAL SAFETY SW.
DIRECTION LT.
GRN WHT
BLK
BLK WHT
BLK RED
BLK RED
PARK LT.
RED GRN
BLK
STARTER
ALTERNATOR
BLK YEL
BLU
BLU YEL
WHT RED
WHT RED
RED WHT
RED BLU
BLK
HEAD LIGHT
RED WHT
BLK
WHT BLK
WHT
BLK YEL
F
N A
IG
L
S
BLK
BLK LT GRN
YEL BLU
YEL BLK
WHT RED
YEL BLU
GRN WHT
DISTRIBUTOR
GRN WHT
HORN RELAY
GRN
GRN YEL
NO. 1 RETARD RLY
NO. 2 RETARD RLY
OIL PRESSURE SW
YEL RED
YEL RED
HORNS
GRN YEL
BLK RED
YEL GRN
T COIL
L COIL
RESISTOR
YEL BLK
YEL
RED
BLKWHT
BLK WHT
YEL GRN
RED WHT
TO EMISSION CONTROL
TEMPERATURE SWITCH
YEL WHT
YEL WHT
BLK RED
RESISTOR
BLU BLK
YEL GRN
GRN
LOW BRAKE SW
RED BLK
RED BLK
BLK WHT
BLK RED
BLK WHT
YEL BLK
IGN RELAY
WHT RED
BLU
RED YEL
BLK
HEAD LIGHT
RED YEL
BLK
RED WHT
RED BLK
RED WHT
RED BLU
GRN WHT
RED GRN
BLK
PARK LT
GRN BLU
BLK WHT
BLK WHT
BLK WHT
FUSE BOX
BLK
GRN BLK
DIRECTION LT.
BLU RED
BLK WHT
RED GRN
GRN YEL
GRN BLK
MARKER LT.

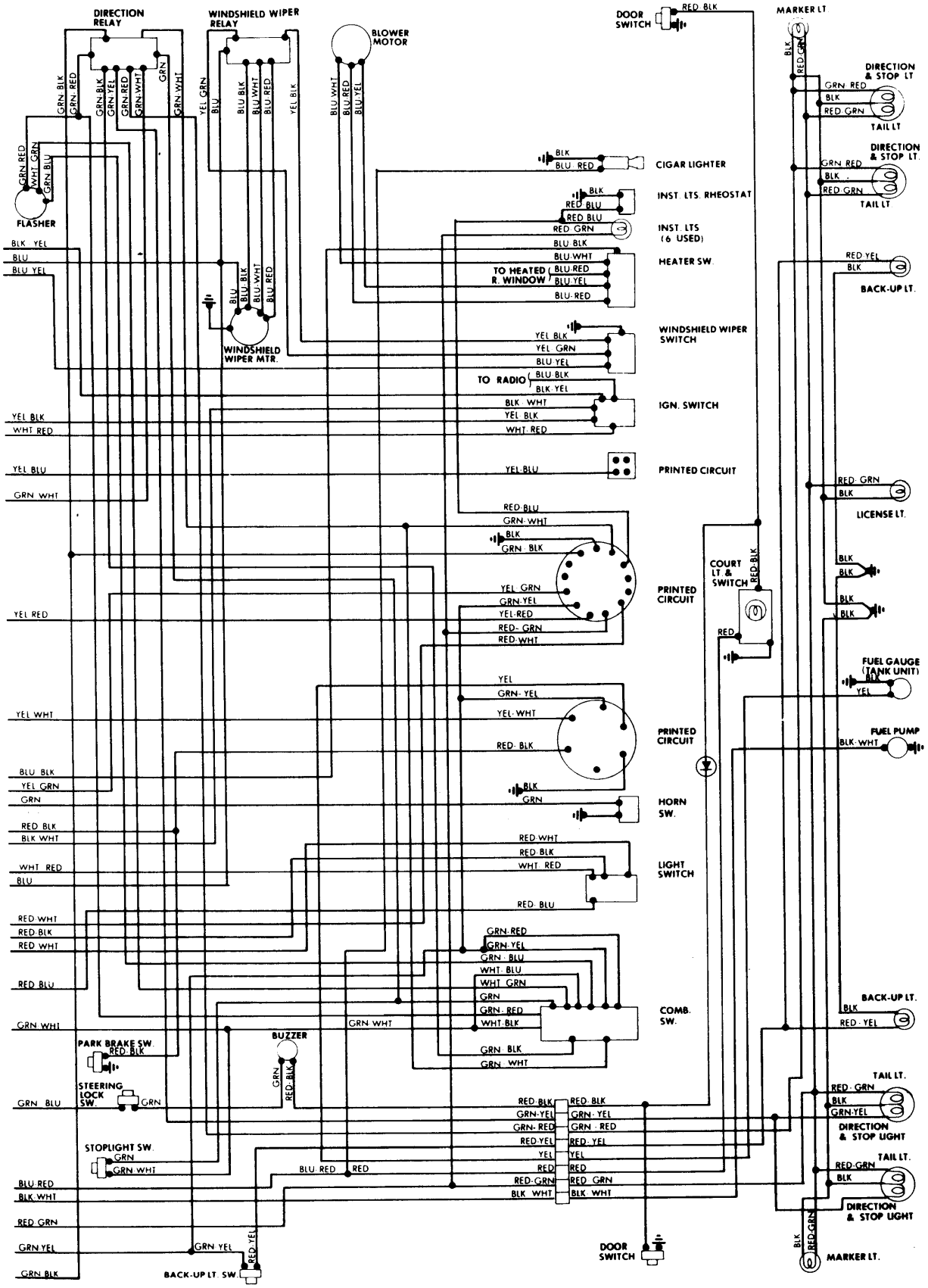
DIRECTION RELAY
WINDSHIELD WIPER RELAY
BLOWER MOTOR
DOOR SWITCH
MARKER LT
DIRECTION & STOP LT
TAIL LT
FLASHER
CIGAR LIGHTER
INST. LTS. RHEOSTAT
INST. LTS (6 USED)
HEATER SW.
TO HEATED R. WINDOW
BACK-UP LT.
WINDSHIELD WIPER MTR.
WINDSHIELD WIPER SWITCH
TO RADIO
IGN. SWITCH
PRINTED CIRCUIT
LICENSE LT.
COURT LT. & SWITCH
FUEL GAUGE (TANK UNIT)
FUEL PUMP
HORN SW.
LIGHT SWITCH
COMB. SW.
PARK BRAKE SW.
BUZZER
STEERING LOCK SW.
STOPLIGHT SW.
DIRECTION & STOP LIGHT
BACK-UP LT. SW.