1975 Fiat

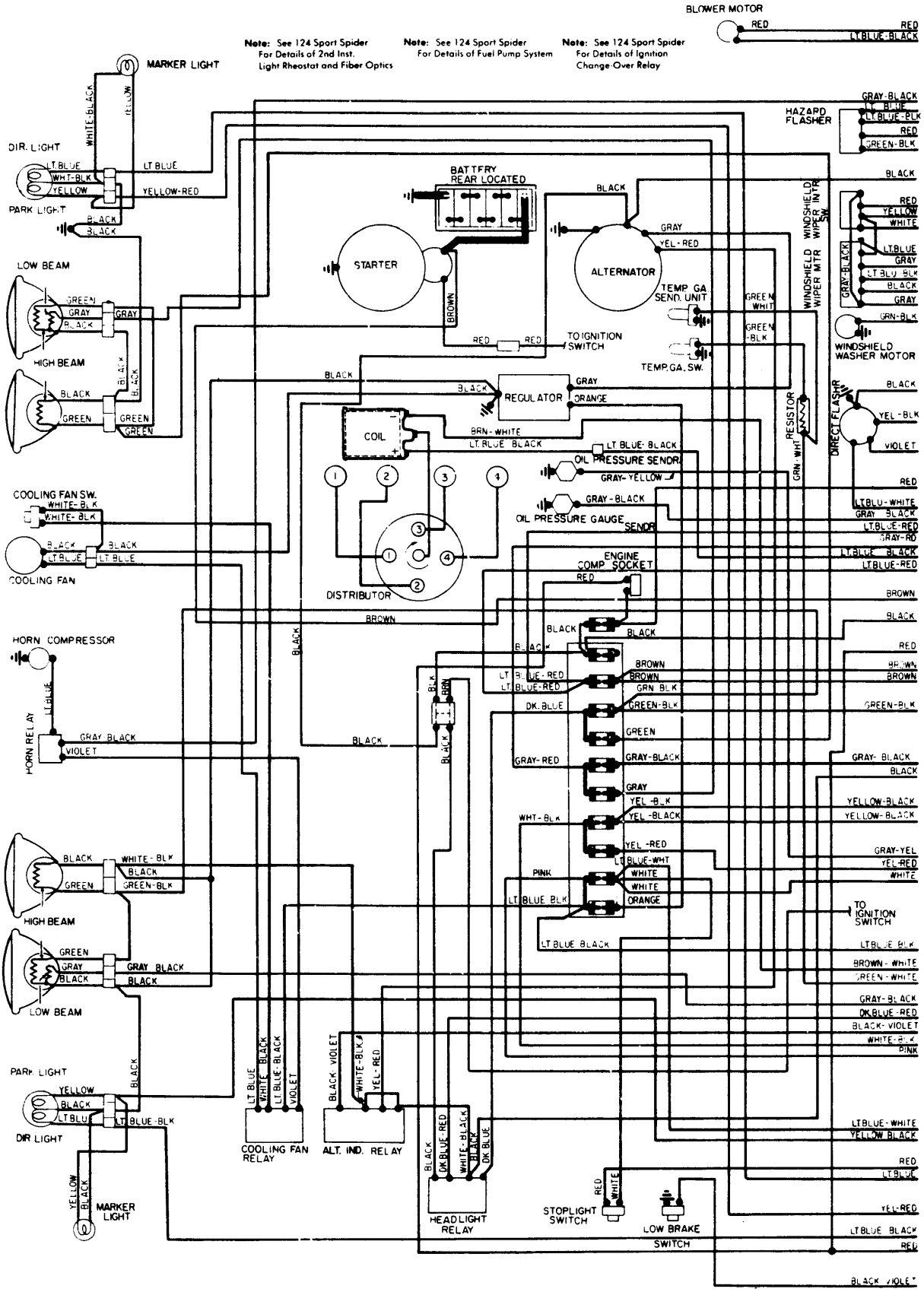
BLOWER MOTOR
RED
RED
LT.BLUE-BLACK
Note: See 124 Sport Spider For Details of 2nd Inst. Light Rheostat and Fiber Optics
Note: See 124 Sport Spider For Details of Fuel Pump System
Note: See 124 Sport Spider For Details of Ignition Change-Over Relay
MARKER LIGHT
WHITE-BLACK
YELLOW
DIR. LIGHT
LT.BLUE
WHT-BLK
YELLOW
PARK LIGHT
LT.BLUE
YELLOW-RED
BLACK
BLACK
LOW BEAM
GREEN
GRAY
BLACK
GRAY
HIGH BEAM
BLACK
GREEN
BLACK
BLACK
GREEN
GREEN
COOLING FAN SW.
WHITE-BLK
WHITE-BLK
BLACK
LT.BLUE
BLACK
LT.BLUE
COOLING FAN
HORN COMPRESSOR
LT.BLUE
HORN RELAY
GRAY-BLACK
VIOLET
HIGH BEAM
BLACK
GREEN
WHITE-BLK
BLACK
GREEN-BLK
LOW BEAM
GREEN
GRAY
BLACK
GRAY-BLACK
BLACK
PARK LIGHT
YELLOW
BLACK
LT.BLUE
LT.BLUE-BLK
DIR LIGHT
YELLOW
BLACK
MARKER LIGHT
BATTERY REAR LOCATED
STARTER
BROWN
BLACK
GRAY
YEL-RED
ALTERNATOR
TEMP. GA. SEND. UNIT
GREEN WHIT
GREEN -BLK
TEMP. GA. SW.
RED
RED
TO IGNITION SWITCH
BLACK
BLACK
REGULATOR
GRAY
ORANGE
COIL
BRN-WHITE
LT.BLUE-BLACK
LT.BLUE-BLACK
OIL PRESSURE SENDR.
GRAY-YELLOW
GRAY-BLACK
OIL PRESSURE GAUGE SENDR.
DISTRIBUTOR
ENGINE COMP. SOCKET
RED
BROWN
BROWN
BLACK
BLACK
BLACK
BLACK
LT.BLUE-RED
LT.BLUE-RED
BROWN
BROWN
GRN-BLK
DK.BLUE
GREEN-BLK
GREEN
GRAY-RED
GRAY-BLACK
GRAY
YEL-BLK
YEL-BLACK
WHT-BLK
YEL-RED
LT.BLUE-WHT
PINK
WHITE
WHITE
ORANGE
LT.BLUE-BLK
LT.BLUE-BLACK
BLK
BRN
BLACK
BLACK
COOLING FAN RELAY
LT.BLUE
WHITE
BLACK
LT.BLUE-BLACK
VIOLET
ALT. IND. RELAY
BLACK-VIOLET
WHITE-BLK
YEL-RED
HEADLIGHT RELAY
BLACK
DK.BLUE-RED
WHITE-BLACK
BLACK
DK.BLUE
STOPLIGHT SWITCH
RED
WHITE
LOW BRAKE SWITCH
HAZARD FLASHER
GRAY-BLACK
LT.BLUE
LT.BLUE-BLK
RED
GREEN-BLK
BLACK
WINDSHIELD WIPER INTR SW.
RED
YELLOW
WHITE
WINDSHIELD WIPER MTR
LT.BLUE
GRAY
LT.BLU-BLK
BLACK
GRAY
GRN-BLK
WINDSHIELD WASHER MOTOR
BLACK
YEL-BLK
VIOLET
DIRECT FLASHR
RESISTOR
GRN-WHT
RED
LTBLU-WHITE
GRAY-BLACK
LT.BLUE-RED
GRAY-RD
LT.BLUE-BLACK
LTBLUE-RED
BROWN
BLACK
RED
BROWN
BROWN
GREEN-BLK
GRAY-BLACK
BLACK
YELLOW-BLACK
YELLOW-BLACK
GRAY-YEL
YEL-RED
WHITE
TO IGNITION SWITCH
LTBLUE-BLK
BROWN-WHITE
GREEN-WHITE
GRAY-BLACK
DK.BLUE-RED
BLACK-VIOLET
WHITE-BLK
PINK
LTBLUE-WHITE
YELLOW-BLACK
RED
LTBLUE
YEL-RED
LTBLUE-BLACK
RED
BLACK-VIOLET

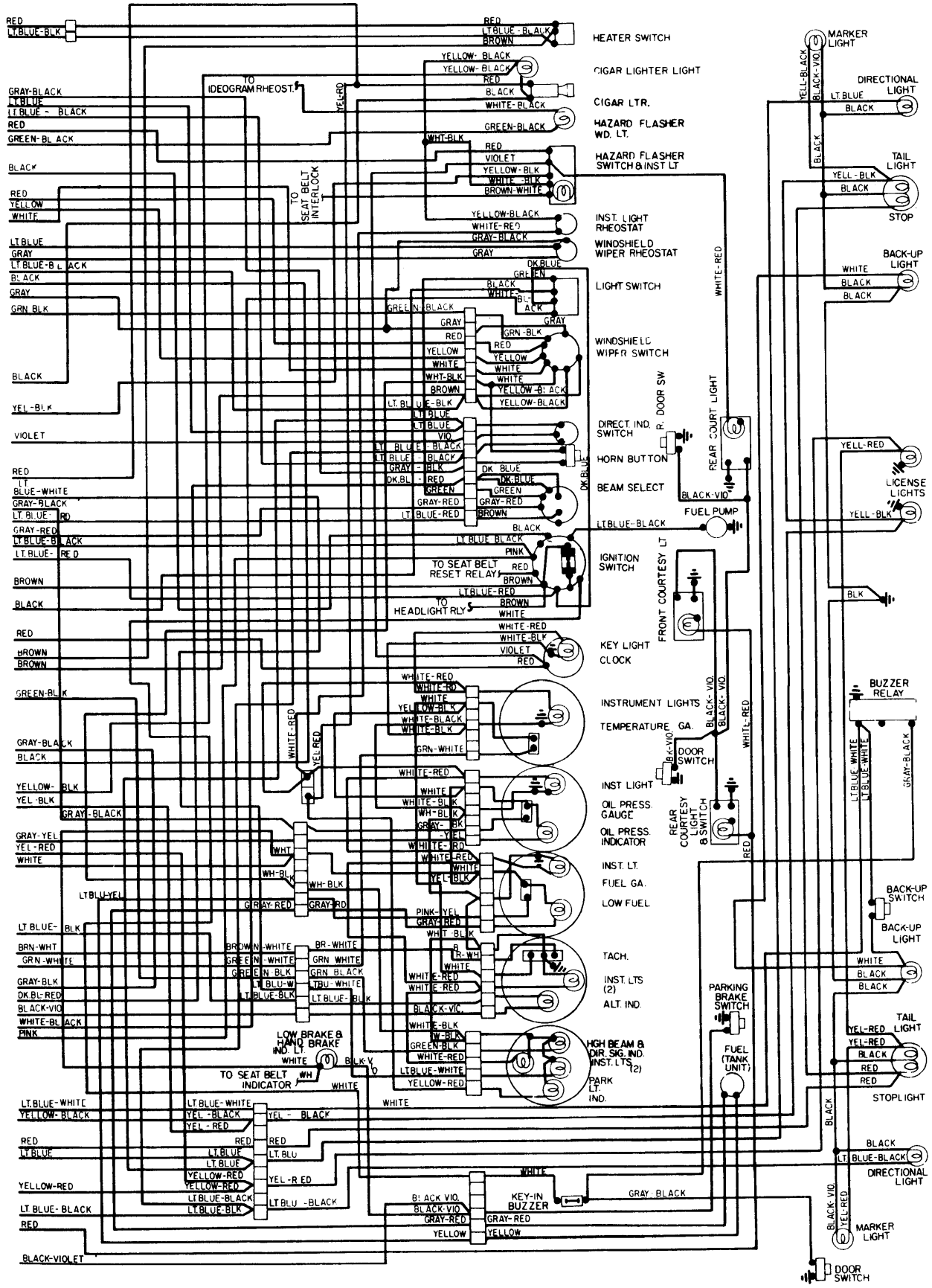
HEATER SWITCH
CIGAR LIGHTER LIGHT
CIGAR LTR.
HAZARD FLASHER WD. LT.
HAZARD FLASHER SWITCH & INST LT
INST. LIGHT RHEOSTAT
WINDSHIELD WIPER RHEOSTAT
LIGHT SWITCH
WINDSHIELD WIPER SWITCH
DIRECT. IND. SWITCH
HORN BUTTON
BEAM SELECT
FUEL PUMP
IGNITION SWITCH
KEY LIGHT
CLOCK
INSTRUMENT LIGHTS
TEMPERATURE GA.
INST. LIGHT
OIL PRESS. GAUGE
OIL PRESS. INDICATOR
INST. LT.
FUEL GA.
LOW FUEL
TACH.
INST. LTS (2)
ALT. IND.
HIGH BEAM & DIR. SIG. IND. INST. LTS (2)
PARK LT. IND.
LOW BRAKE & HAND BRAKE IND. LT.
TO SEAT BELT INDICATOR
TO IDEOGRAM RHEOST.
TO SEAT BELT INTERLOCK
TO SEAT BELT RESET RELAY
TO HEADLIGHT RLY
DOOR SW.
REAR COURT LIGHT
FRONT COURTESY LT
DOOR SWITCH
REAR COURTESY LIGHT & SWITCH
PARKING BRAKE SWITCH
FUEL (TANK UNIT)
KEY-IN BUZZER
MARKER LIGHT
DIRECTIONAL LIGHT
TAIL LIGHT
STOP
BACK-UP LIGHT
LICENSE LIGHTS
BUZZER RELAY
BACK-UP SWITCH
STOPLIGHT
DIRECTIONAL LIGHT
MARKER LIGHT
DOOR SWITCH