1975 Colt

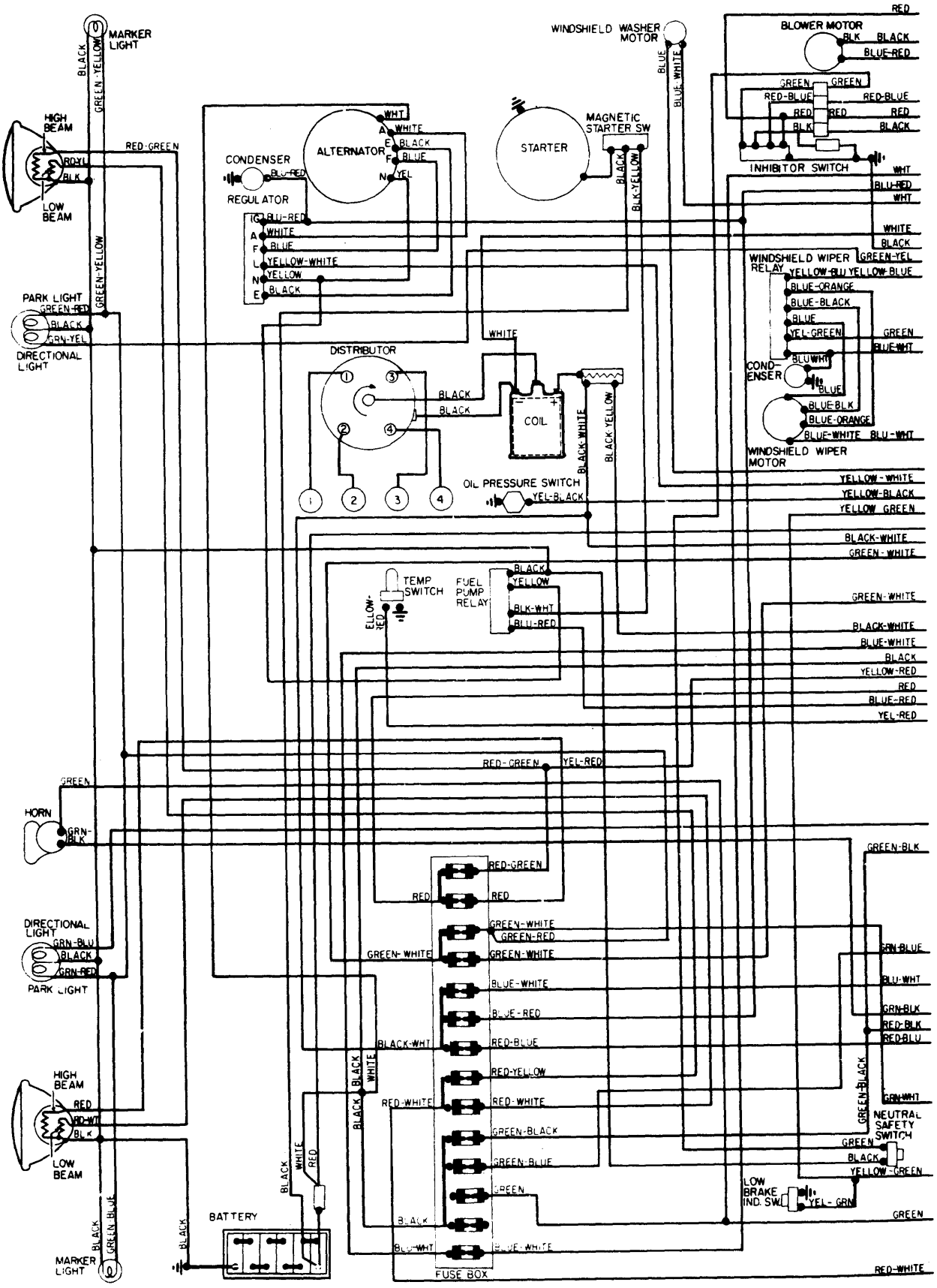
MARKER LIGHT
HIGH BEAM
LOW BEAM
PARK LIGHT
DIRECTIONAL LIGHT
HORN
DIRECTIONAL LIGHT
PARK LIGHT
HIGH BEAM
LOW BEAM
MARKER LIGHT
BATTERY
FUSE BOX
CONDENSER
REGULATOR
ALTERNATOR
STARTER
MAGNETIC STARTER SW
WINDSHIELD WASHER MOTOR
BLOWER MOTOR
INHIBITOR SWITCH
WINDSHIELD WIPER RELAY
CONDENSER
WINDSHIELD WIPER MOTOR
DISTRIBUTOR
COIL
OIL PRESSURE SWITCH
TEMP SWITCH
FUEL PUMP RELAY
NEUTRAL SAFETY SWITCH
LOW BRAKE IND. SW.

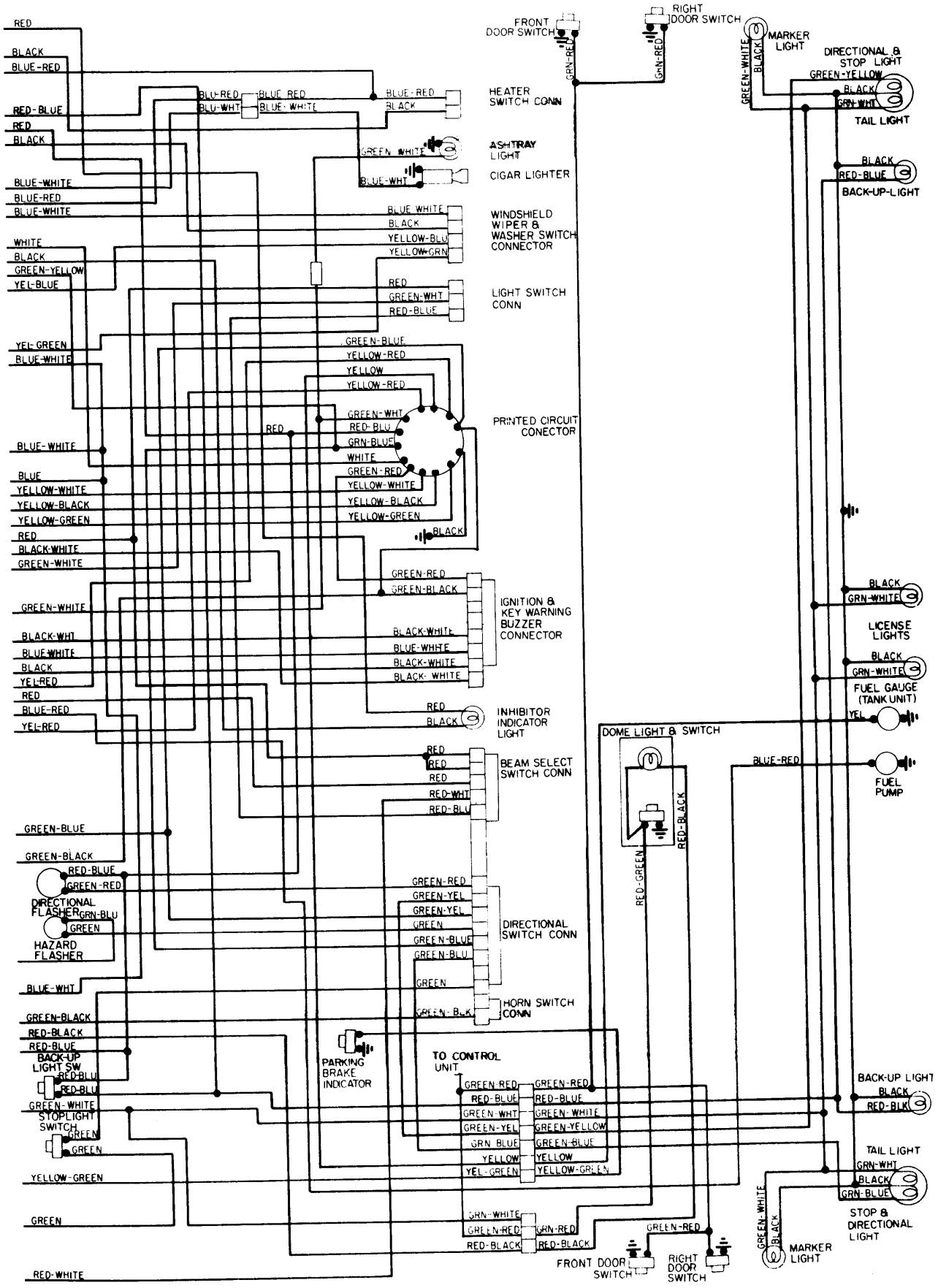
FRONT DOOR SWITCH
RIGHT DOOR SWITCH
MARKER LIGHT
DIRECTIONAL & STOP LIGHT
TAIL LIGHT
HEATER SWITCH CONN
ASHTRAY LIGHT
CIGAR LIGHTER
BACK-UP-LIGHT
WINDSHIELD WIPER & WASHER SWITCH CONNECTOR
LIGHT SWITCH CONN
PRINTED CIRCUIT CONECTOR
IGNITION & KEY WARNING BUZZER CONNECTOR
LICENSE LIGHTS
FUEL GAUGE (TANK UNIT)
INHIBITOR INDICATOR LIGHT
DOME LIGHT & SWITCH
BEAM SELECT SWITCH CONN
FUEL PUMP
DIRECTIONAL FLASHER
HAZARD FLASHER
DIRECTIONAL SWITCH CONN
HORN SWITCH CONN
PARKING BRAKE INDICATOR
TO CONTROL UNIT
BACK-UP LIGHT SW
STOPLIGHT SWITCH
BACK-UP LIGHT
TAIL LIGHT
STOP & DIRECTIONAL LIGHT
MARKER LIGHT
FRONT DOOR SWITCH
RIGHT DOOR SWITCH