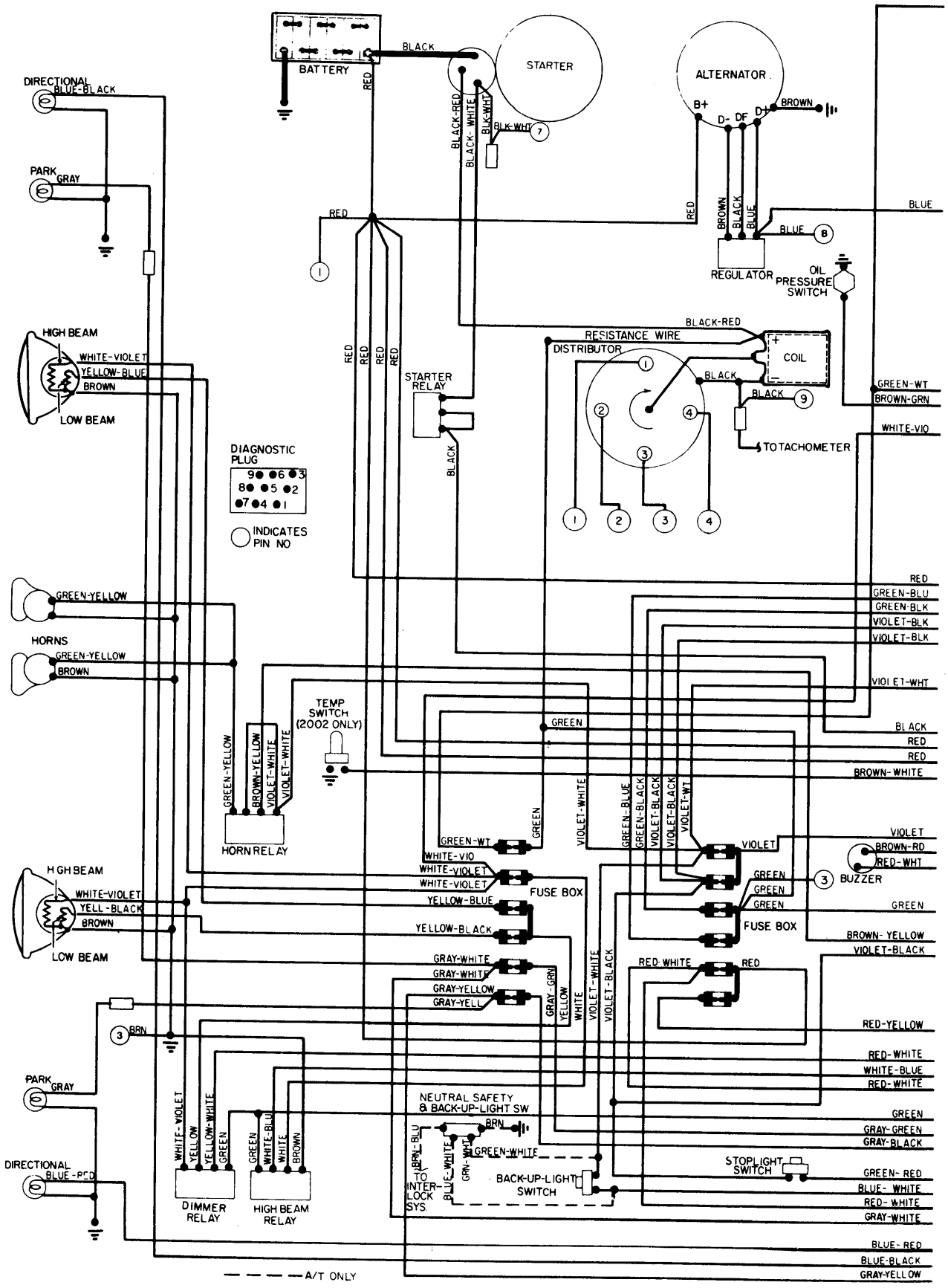
BATTERY
BLACK
RED
STARTER
ALTERNATOR
B+
D-
DF
D+
BROWN
BLACK-RED
BLACK-WHITE
BLK-WHT
DIRECTIONAL
BLUE-BLACK
PARK
GRAY
BROWN
BLACK
BLUE
BLUE
REGULATOR
OIL PRESSURE SWITCH
HIGH BEAM
WHITE-VIOLET
YELLOW-BLUE
BROWN
LOW BEAM
RESISTANCE WIRE
DISTRIBUTOR
COIL
STARTER RELAY
GREEN-WT
BROWN-GRN
WHITE-VIO
TOTACHOMETER
DIAGNOSTIC PLUG
INDICATES PIN NO
GREEN-YELLOW
HORNS
GREEN-YELLOW
BROWN
GREEN-BLU
GREEN-BLK
VIOLET-BLK
VIOLET-WHT
TEMP SWITCH (2002 ONLY)
GREEN
BROWN-WHITE
HORN RELAY
VIOLET-WHITE
GREEN-BLUE
GREEN-BLACK
VIOLET-BLACK
VIOLET-WT
VIOLET
BROWN-RD
RED-WHT
BUZZER
FUSE BOX
WHITE-VIOLET
YELL-BLACK
YELLOW-BLUE
YELLOW-BLACK
GRAY-WHITE
GRAY-YELLOW
GRAY-YELL
GRAY-GRN
YELLOW
WHITE
BROWN-YELLOW
RED-WHITE
BRN
RED-YELLOW
WHITE-BLUE
NEUTRAL SAFETY & BACK-UP-LIGHT SW
GREEN-WHITE
GRAY-GREEN
GRAY-BLACK
STOPLIGHT SWITCH
BACK-UP-LIGHT SWITCH
TO INTER-LOCK SYS.
BRN-BLU
BLUE-WHITE
GRN-WHT
GREEN-RED
BLUE-RED
BLUE-BLACK
GRAY-YELLOW
DIRECTIONAL
BLUE-RED
DIMMER RELAY
HIGH BEAM RELAY
A/T ONLY

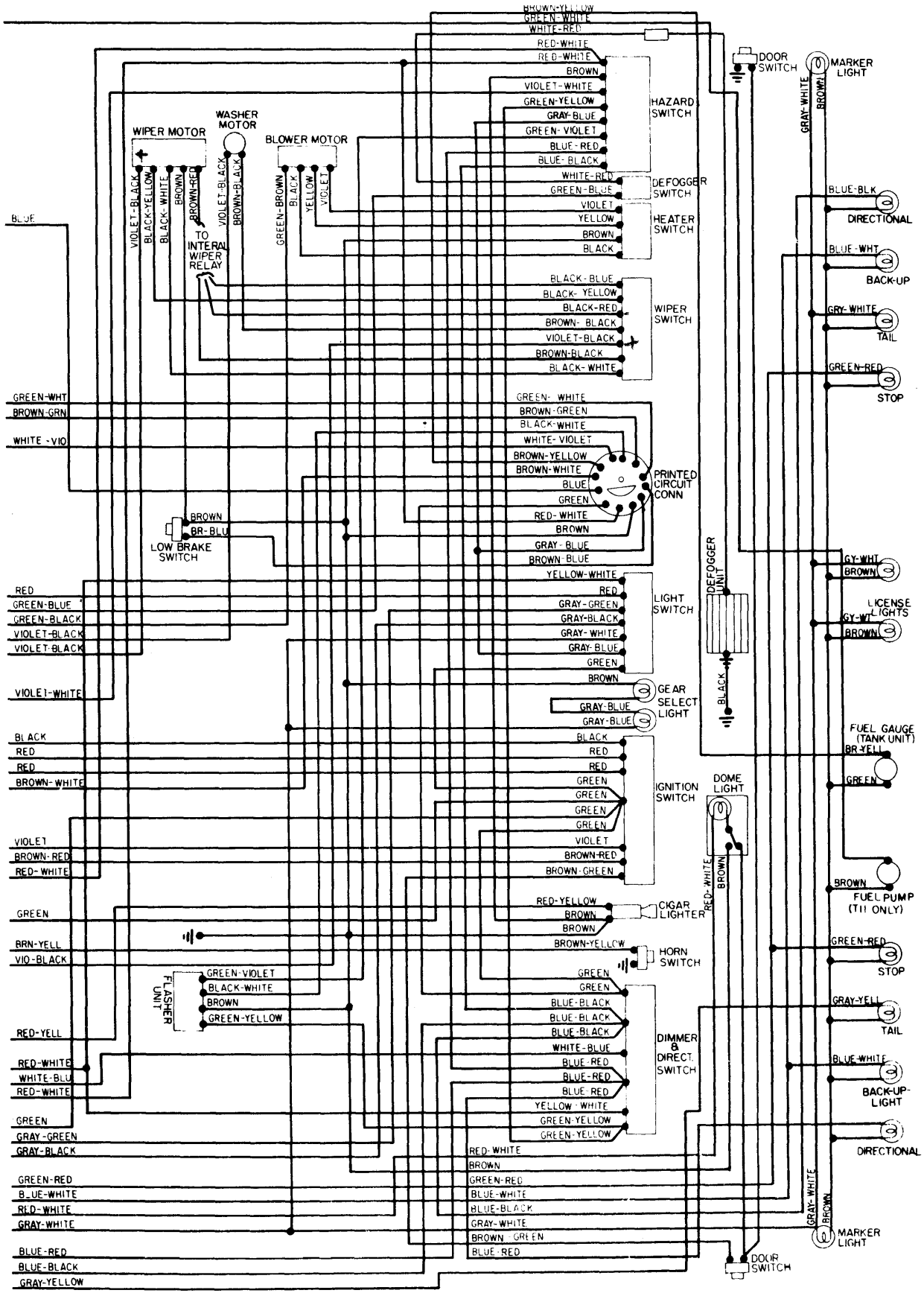
WIPER MOTOR
WASHER MOTOR
BLOWER MOTOR
VIOLET-BLACK
BLACK-YELLOW
BLACK-WHITE
BROWN
BROWN-RED
VIOLET-BLACK
BROWN-BLACK
GREEN-BROWN
BLACK
YELLOW
VIOLET
TO INTERAL WIPER RELAY
BLUE
GREEN-WHT
BROWN-GRN
WHITE-VIO
BROWN
BR-BLU
LOW BRAKE SWITCH
RED
GREEN-BLUE
GREEN-BLACK
VIOLET-BLACK
VIOLET-BLACK
VIOLET-WHITE
BLACK
RED
RED
BROWN-WHITE
VIOLET
BROWN-RED
RED-WHITE
GREEN
BRN-YELL
VIO-BLACK
FLASHER UNIT
GREEN-VIOLET
BLACK-WHITE
BROWN
GREEN-YELLOW
RED-YELL
RED-WHITE
WHITE-BLU
RED-WHITE
GREEN
GRAY-GREEN
GRAY-BLACK
GREEN-RED
BLUE-WHITE
RED-WHITE
GRAY-WHITE
BLUE-RED
BLUE-BLACK
GRAY-YELLOW
BROWN-YELLOW
GREEN-WHITE
WHITE-RED
RED-WHITE
RED-WHITE
BROWN
VIOLET-WHITE
GREEN-YELLOW
GRAY-BLUE
GREEN-VIOLET
BLUE-RED
BLUE-BLACK
HAZARD SWITCH
WHITE-RED
GREEN-BLUE
DEFOGGER SWITCH
VIOLET
YELLOW
BROWN
BLACK
HEATER SWITCH
BLACK-BLUE
BLACK-YELLOW
BLACK-RED
BROWN-BLACK
VIOLET-BLACK
BROWN-BLACK
BLACK-WHITE
WIPER SWITCH
GREEN-WHITE
BROWN-GREEN
BLACK-WHITE
WHITE-VIOLET
BROWN-YELLOW
BROWN-WHITE
BLUE
GREEN
RED-WHITE
BROWN
GRAY-BLUE
BROWN-BLUE
PRINTED CIRCUIT CONN
YELLOW-WHITE
RED
GRAY-GREEN
GRAY-BLACK
GRAY-WHITE
GRAY-BLUE
GREEN
LIGHT SWITCH
BROWN
GRAY-BLUE
GRAY-BLUE
GEAR SELECT LIGHT
BLACK
RED
RED
GREEN
GREEN
GREEN
GREEN
VIOLET
BROWN-RED
BROWN-GREEN
IGNITION SWITCH
RED-YELLOW
BROWN
BROWN
CIGAR LIGHTER
BROWN-YELLOW
HORN SWITCH
GREEN
GREEN
BLUE-BLACK
BLUE-BLACK
BLUE-BLACK
WHITE-BLUE
BLUE-RED
BLUE-RED
BLUE-RED
YELLOW-WHITE
GREEN-YELLOW
GREEN-YELLOW
DIMMER & DIRECT. SWITCH
RED-WHITE
BROWN
GREEN-RED
BLUE-WHITE
BLUE-BLACK
GRAY-WHITE
BROWN-GREEN
BLUE-RED
DEFOGGER UNIT
BLACK
DOOR SWITCH
DOME LIGHT
RED-WHITE
BROWN
DOOR SWITCH
MARKER LIGHT
GRAY-WHITE
BROWN
BLUE-BLK
DIRECTIONAL
BLUE-WHT
BACK-UP
GRY-WHITE
TAIL
GREEN-RED
STOP
GY-WHT
BROWN
LICENSE LIGHTS
GY-WT
BROWN
FUEL GAUGE (TANK UNIT)
BR-YELL
GREEN
BROWN
FUEL PUMP (TII ONLY)
GREEN-RED
STOP
GRAY-YELL
TAIL
BLUE-WHITE
BACK-UP LIGHT
DIRECTIONAL
GRAY-WHITE
BROWN
MARKER LIGHT