1975 Audi

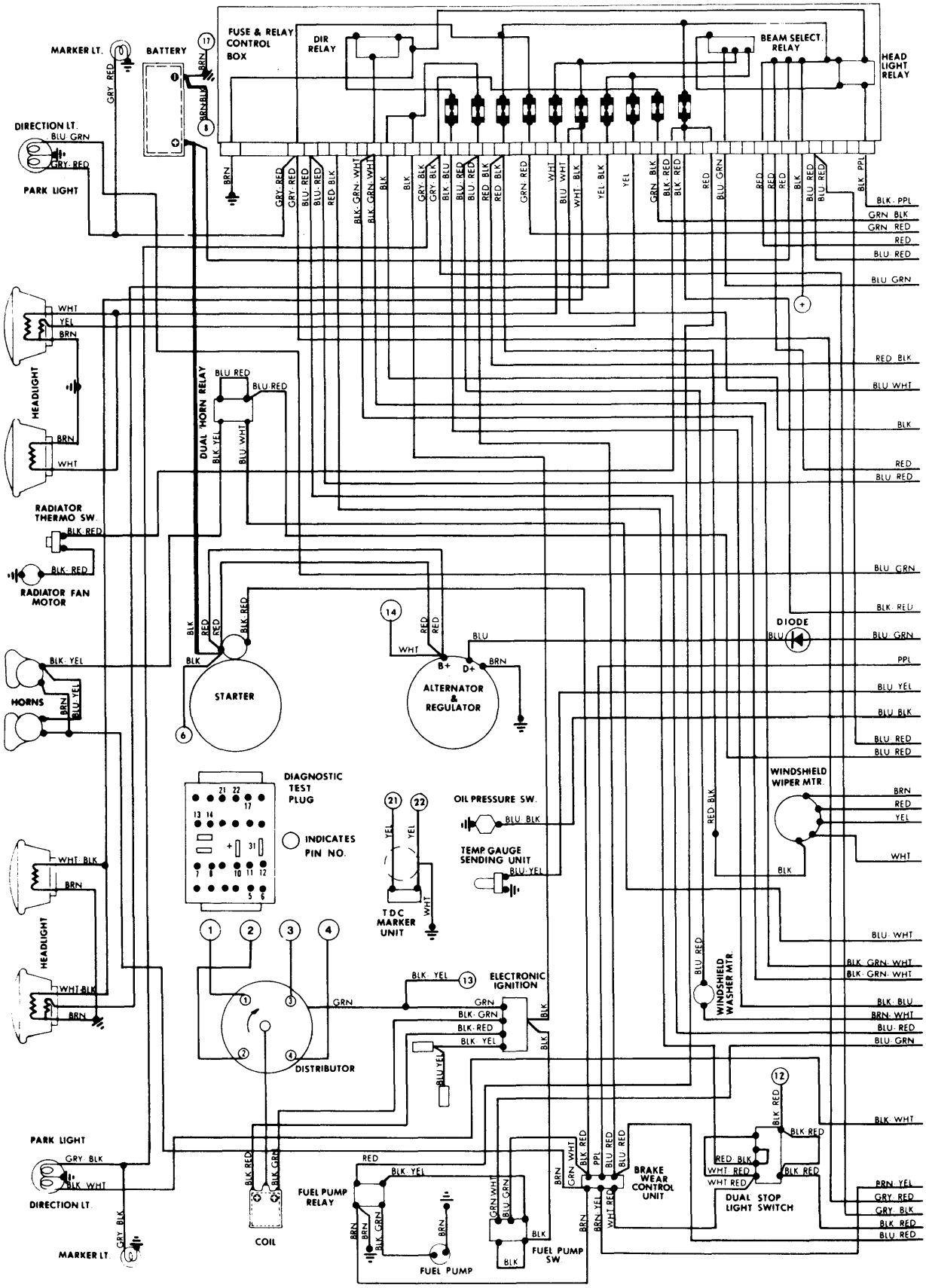
FUSE & RELAY CONTROL BOX
DIR RELAY
BEAM SELECT. RELAY
HEAD LIGHT RELAY
MARKER LT.
BATTERY
DIRECTION LT.
PARK LIGHT
HEADLIGHT
DUAL HORN RELAY
RADIATOR THERMO SW.
RADIATOR FAN MOTOR
HORNS
STARTER
ALTERNATOR & REGULATOR
DIODE
DIAGNOSTIC TEST PLUG
INDICATES PIN NO.
OIL PRESSURE SW.
TEMP GAUGE SENDING UNIT
TDC MARKER UNIT
ELECTRONIC IGNITION
DISTRIBUTOR
WINDSHIELD WIPER MTR.
WINDSHIELD WASHER MTR.
BRAKE WEAR CONTROL UNIT
DUAL STOP LIGHT SWITCH
FUEL PUMP RELAY
FUEL PUMP
FUEL PUMP SW
COIL

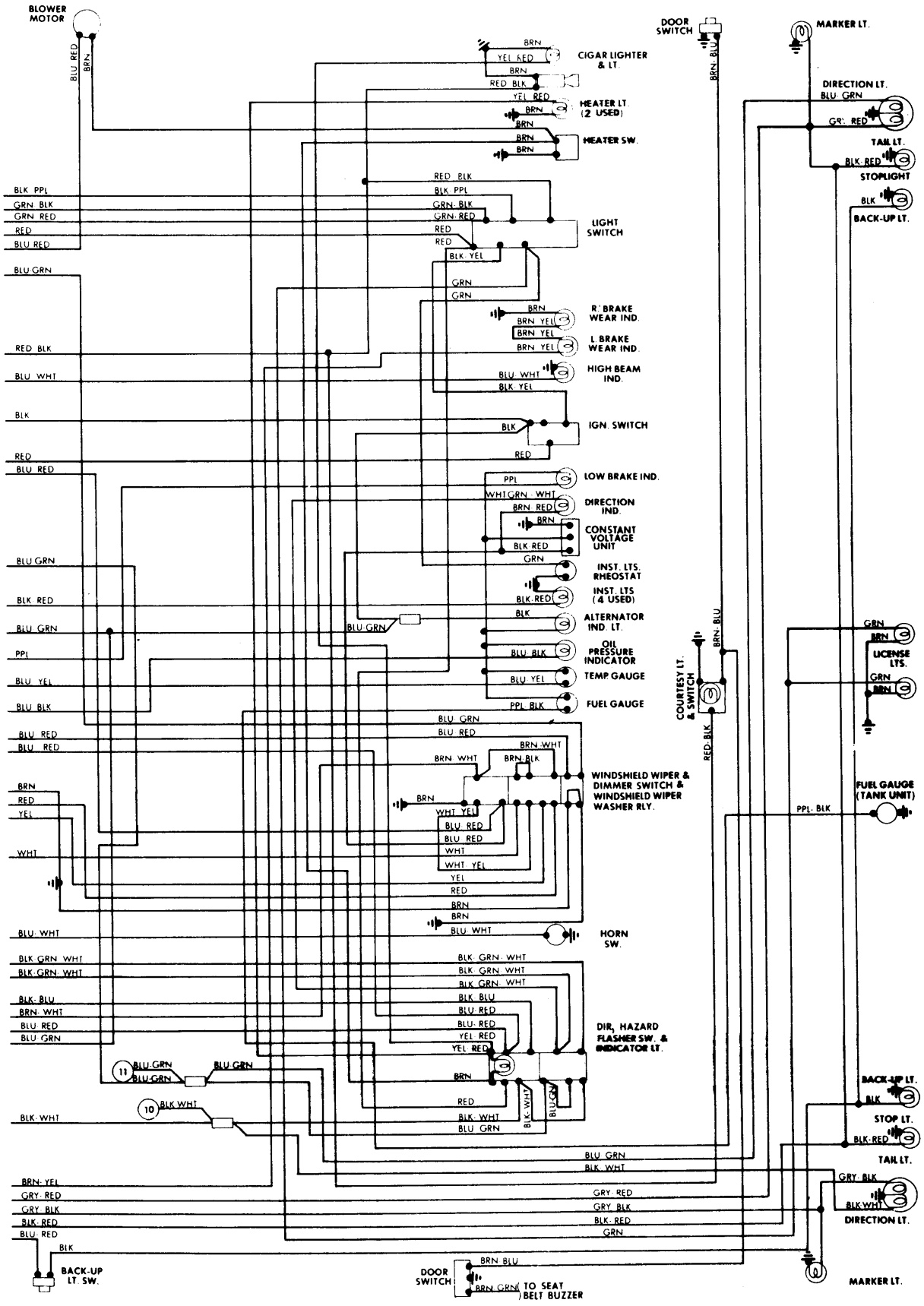
BLOWER MOTOR
BLU RED
BRN
CIGAR LIGHTER & LT.
HEATER LT. (2 USED)
HEATER SW.
LIGHT SWITCH
R. BRAKE WEAR IND.
L. BRAKE WEAR IND.
HIGH BEAM IND.
IGN. SWITCH
LOW BRAKE IND.
DIRECTION IND.
CONSTANT VOLTAGE UNIT
INST. LTS. RHEOSTAT
INST. LTS (4 USED)
ALTERNATOR IND. LT.
OIL PRESSURE INDICATOR
TEMP GAUGE
FUEL GAUGE
WINDSHIELD WIPER & DIMMER SWITCH & WINDSHIELD WIPER WASHER RLY.
HORN SW.
DIR, HAZARD FLASHER SW. & INDICATOR LT.
DOOR SWITCH
COURTESY LT. & SWITCH
MARKER LT.
DIRECTION LT.
TAIL LT.
STOPLIGHT
BACK-UP LT.
LICENSE LTS.
FUEL GAUGE (TANK UNIT)
STOP LT.
BACK-UP LT. SW.
TO SEAT BELT BUZZER