1974 Seat Belt Starter Interlock

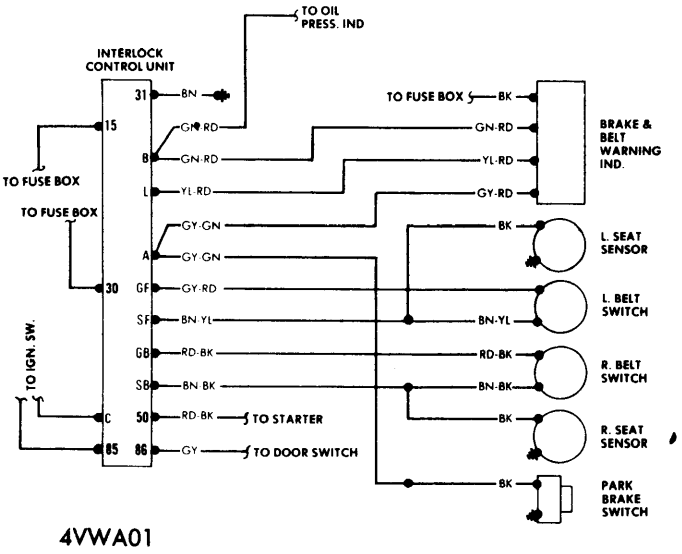

VOLKSWAGEN TYPE 1

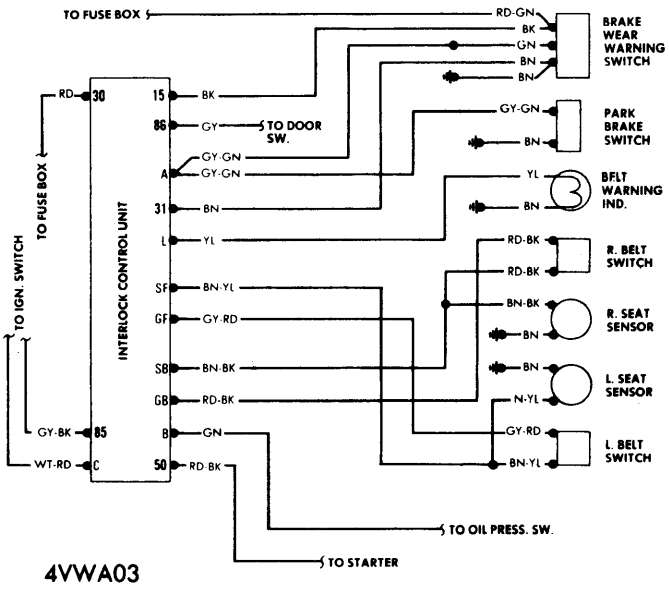

VOLKSWAGEN DASHER

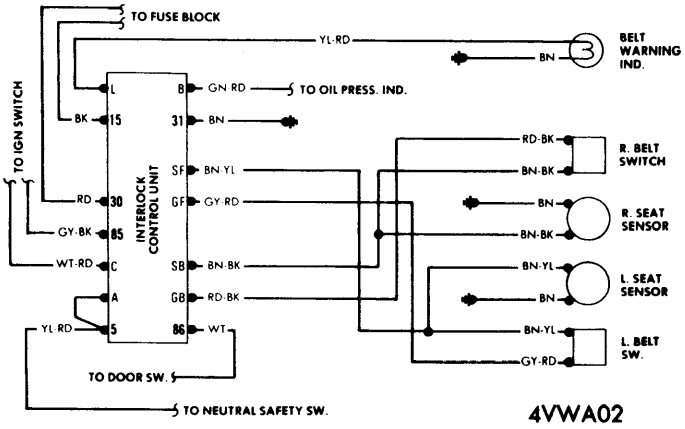

VOLKSWAGEN TYPE 4

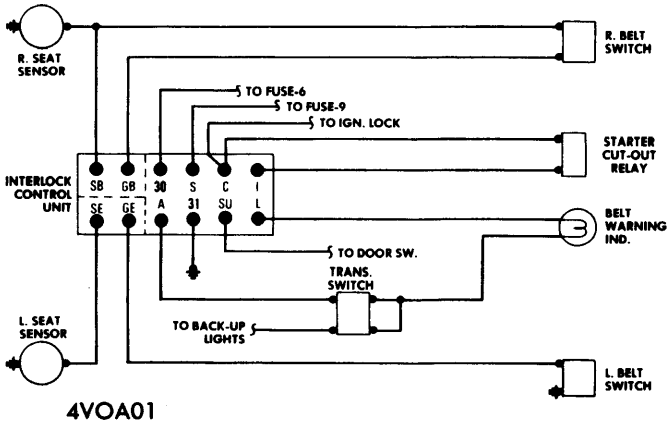

VOLVO (ALL MODELS)

Copyright (c) 2001 Mitchell Repair Information Company