1973 Renault

R-17

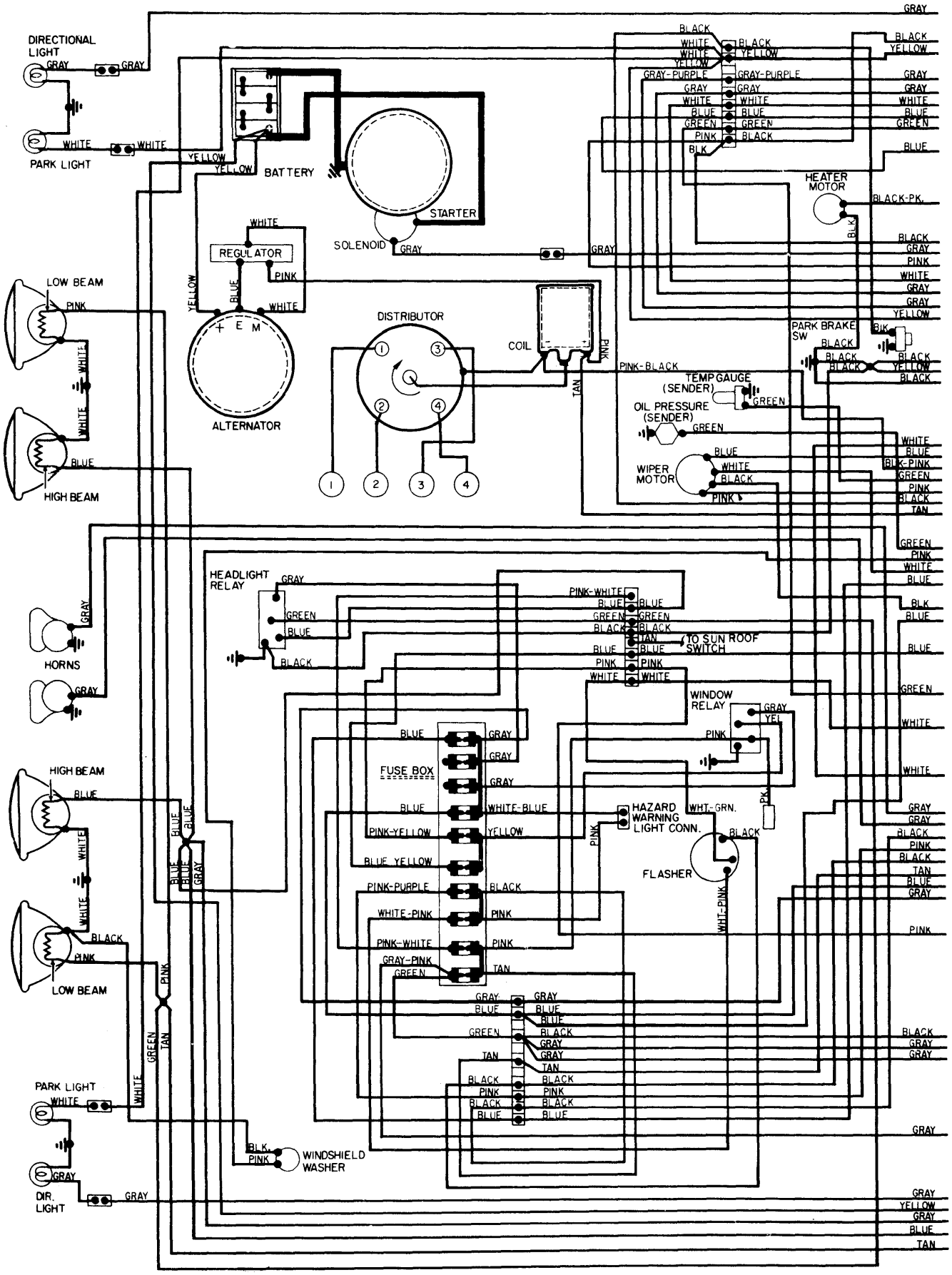

Copyright (c) 2001 Mitchell Repair Information Company

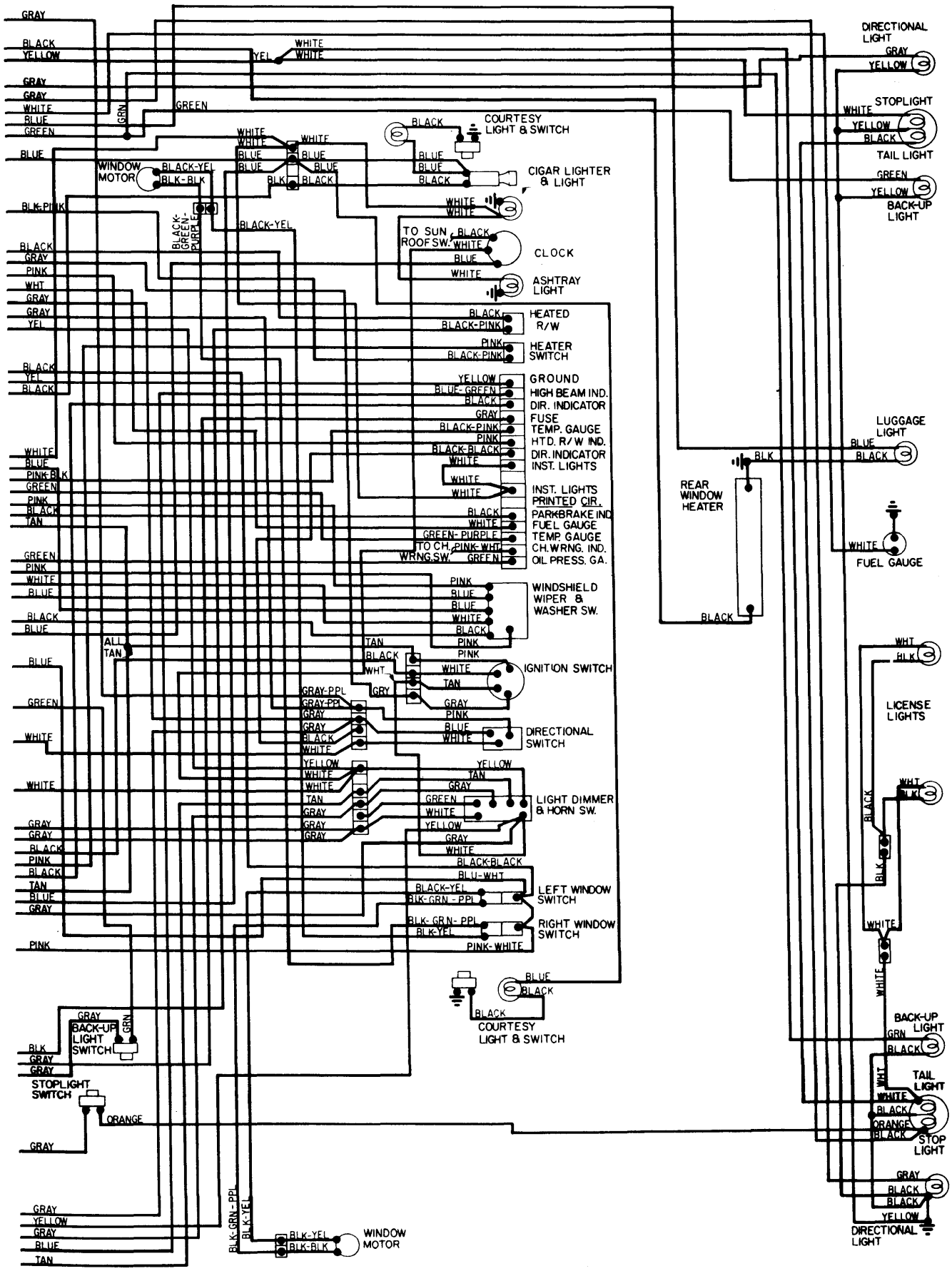

Copyright (c) 2001 Mitchell Repair Information Company