# 1973 Porsche

914

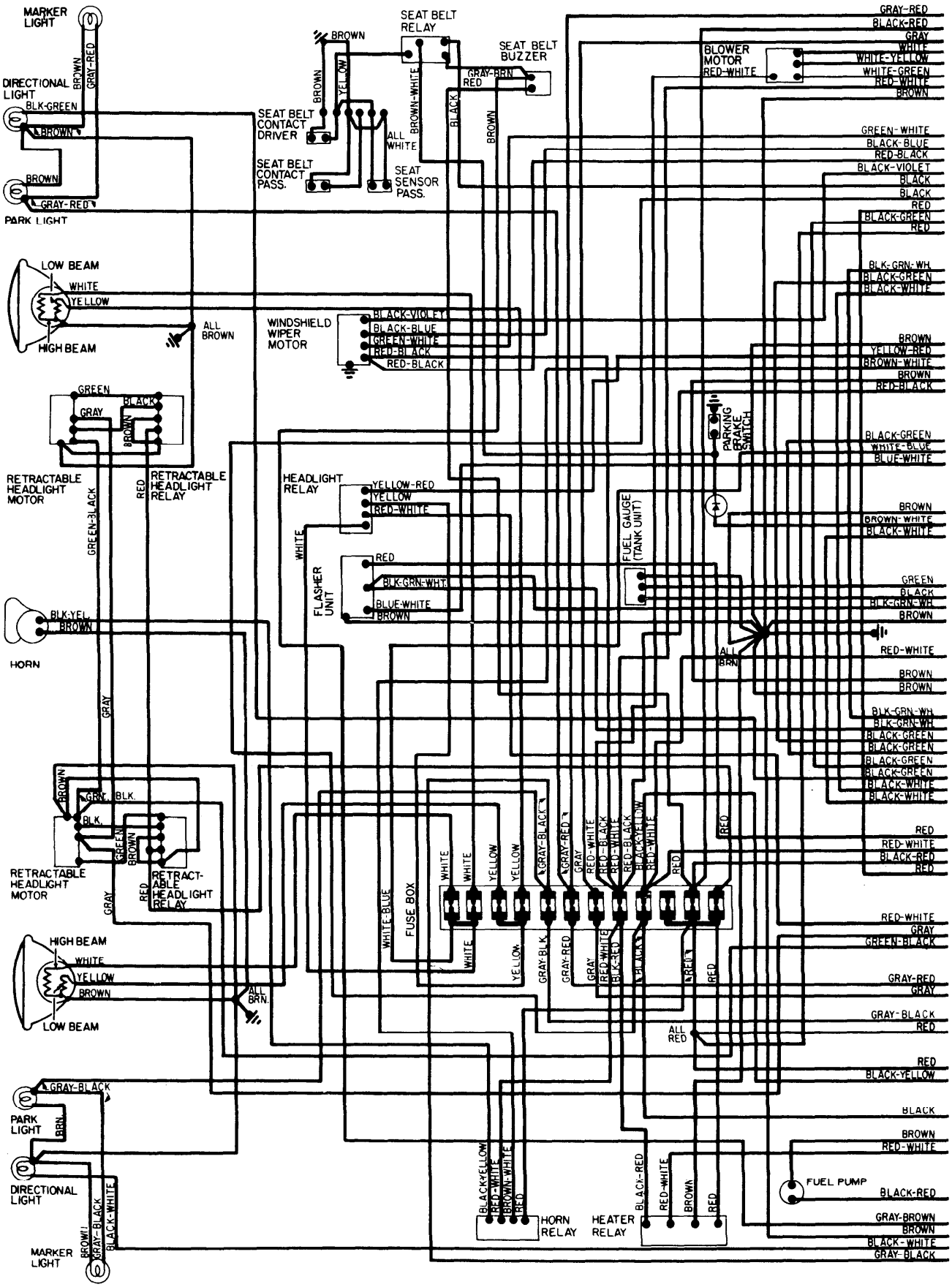


Copyright (c) 2001 Mitchell Repair Information Company

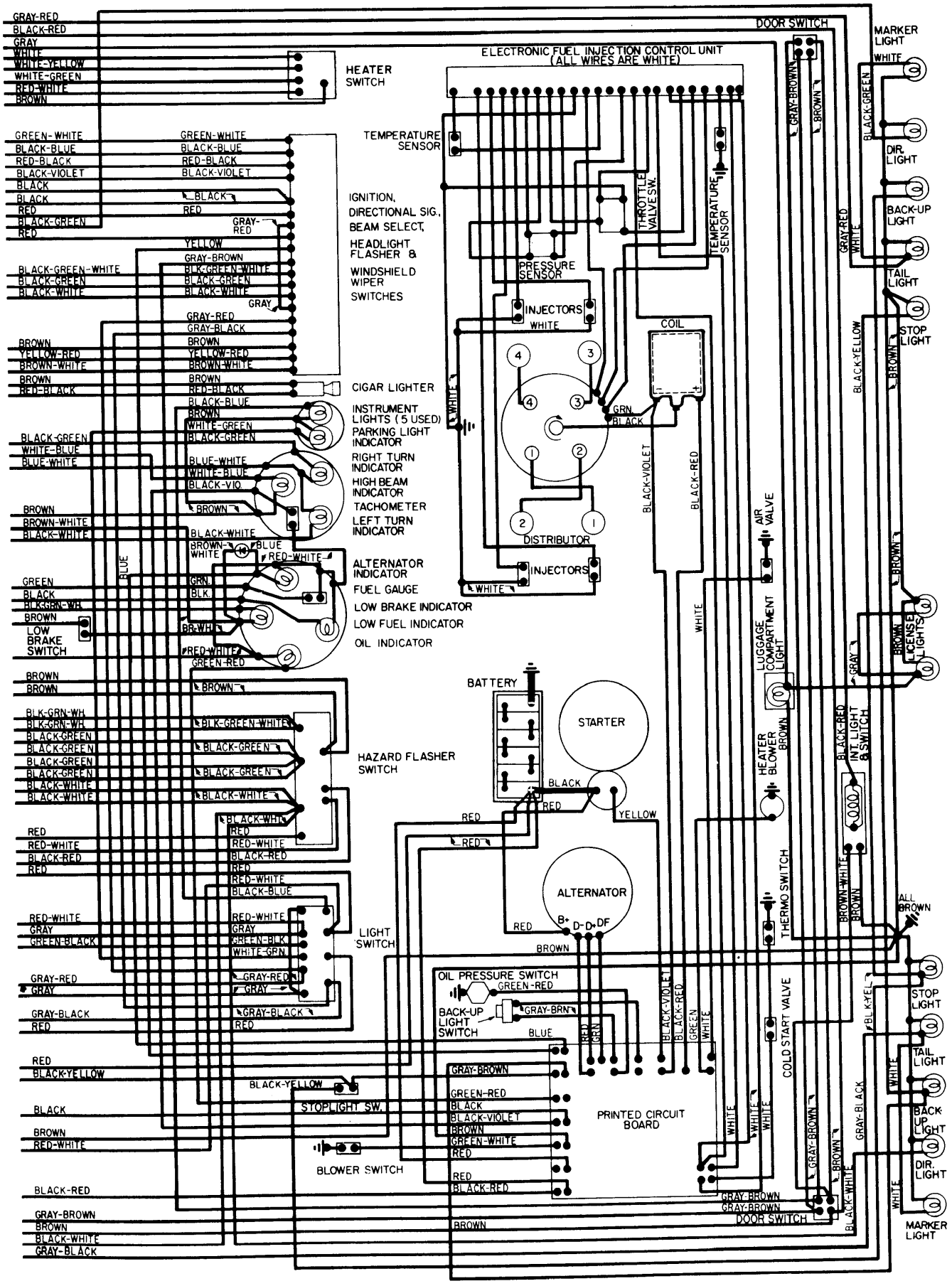


Copyright (c) 2001 Mitchell Repair Information Company