Triumph

1971 TR-6

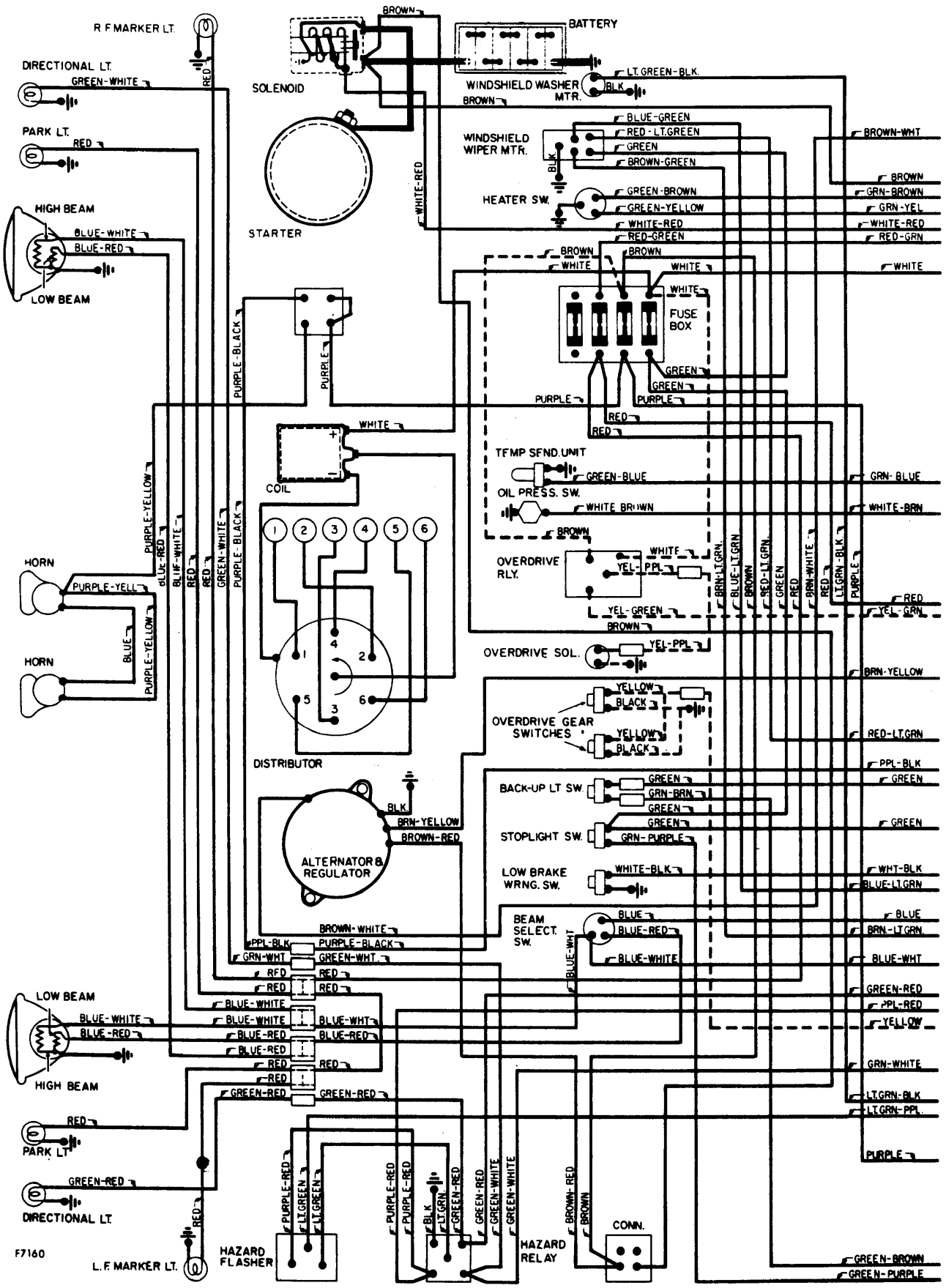

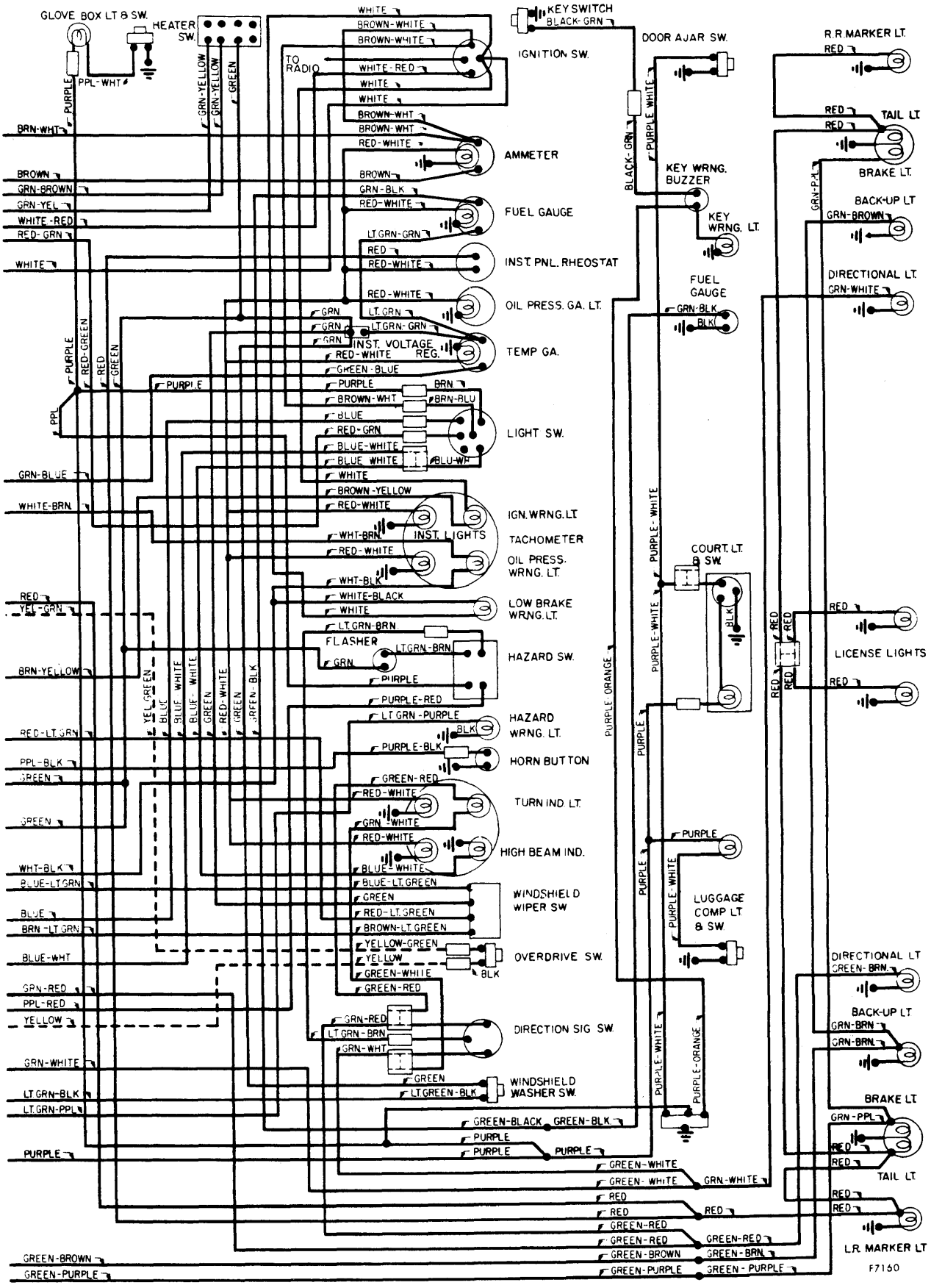
GLOVE BOX LT & SW.
HEATER SW.
KEY SWITCH
BLACK-GRN
IGNITION SW.
TO RADIO
DOOR AJAR SW.
R.R. MARKER LT.
TAIL LT.
BRAKE LT.
BACK-UP LT.
DIRECTIONAL LT.
AMMETER
FUEL GAUGE
INST. PNL. RHEOSTAT
OIL PRESS. GA. LT.
INST. VOLTAGE REG.
TEMP GA.
LIGHT SW.
IGN. WRNG. LT.
INST. LIGHTS
TACHOMETER
OIL PRESS. WRNG. LT.
LOW BRAKE WRNG. LT.
FLASHER
HAZARD SW.
HAZARD WRNG. LT.
HORN BUTTON
TURN IND. LT.
HIGH BEAM IND.
WINDSHIELD WIPER SW.
OVERDRIVE SW.
DIRECTION SIG. SW.
WINDSHIELD WASHER SW.
KEY WRNG. BUZZER
KEY WRNG. LT.
FUEL GAUGE
COURT. LT. & SW.
LUGGAGE COMP. LT. & SW.
LICENSE LIGHTS
L.R. MARKER LT.
F7160