Toyota

1971 Corona

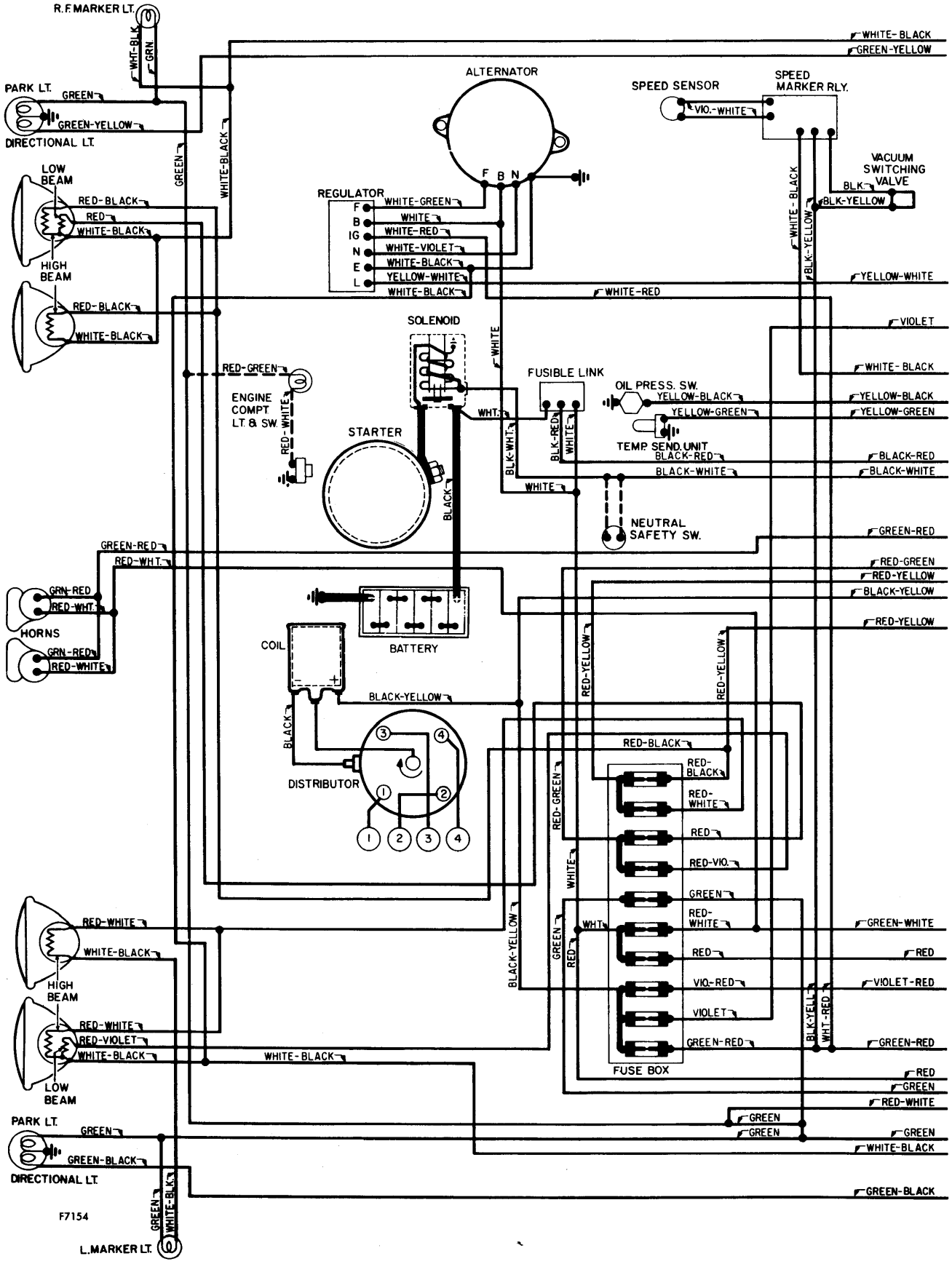

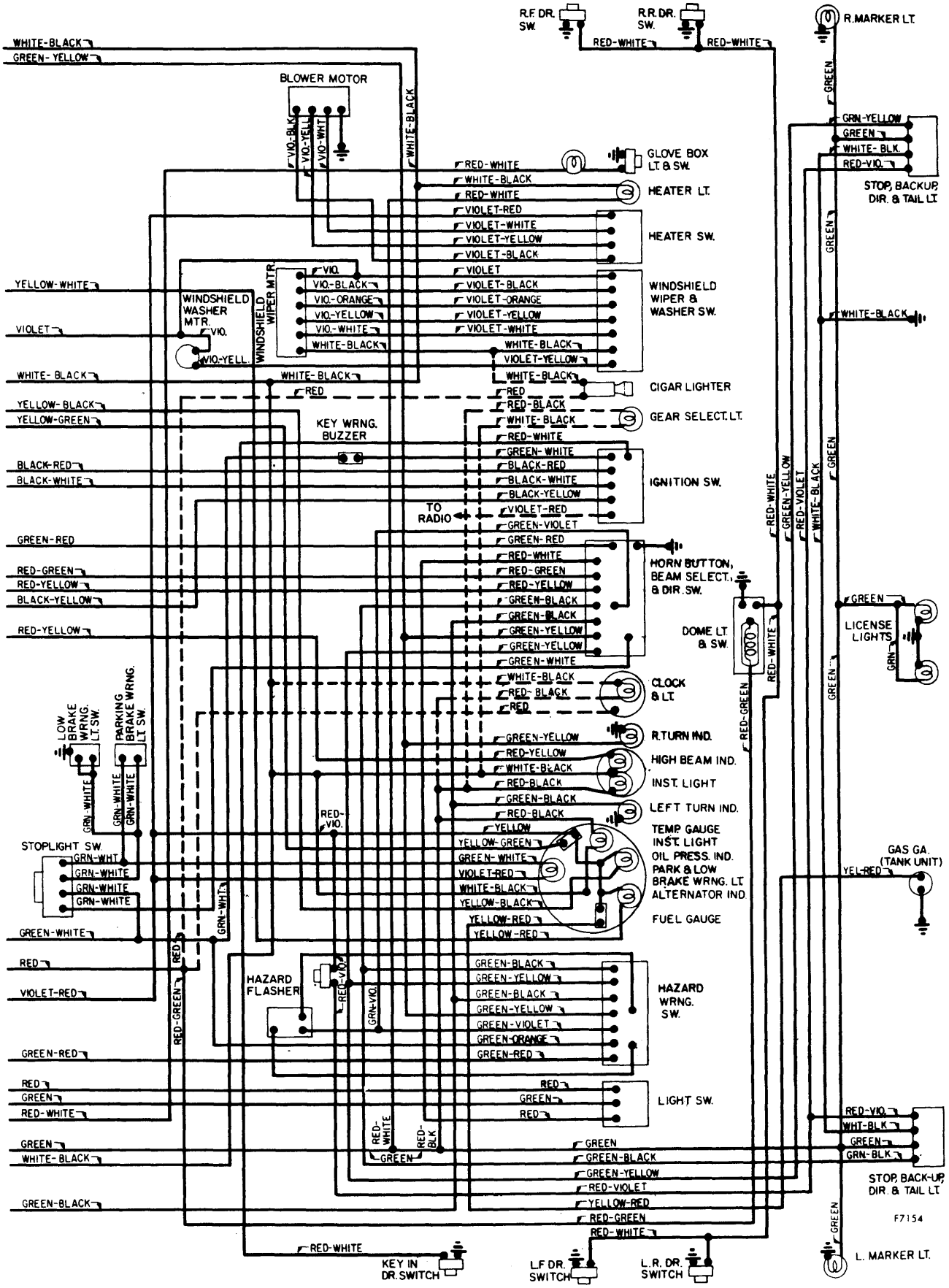
R.F. DR. SW.
R.R. DR. SW.
R. MARKER LT.
BLOWER MOTOR
GLOVE BOX LT. & SW.
HEATER LT.
HEATER SW.
WINDSHIELD WIPER & WASHER SW.
WINDSHIELD WASHER MTR.
WINDSHIELD WIPER MTR.
CIGAR LIGHTER
GEAR SELECT. LT.
KEY WRNG. BUZZER
IGNITION SW.
TO RADIO
HORN BUTTON, BEAM SELECT., & DIR. SW.
DOME LT. & SW.
LICENSE LIGHTS
CLOCK & LT.
R. TURN IND.
HIGH BEAM IND.
INST. LIGHT
LEFT TURN IND.
TEMP. GAUGE
INST. LIGHT
OIL PRESS. IND.
PARK & LOW BRAKE WRNG. LT.
ALTERNATOR IND.
FUEL GAUGE
GAS GA. (TANK UNIT)
STOP, BACKUP, DIR. & TAIL LT.
LOW BRAKE WRNG. LT. SW.
PARKING BRAKE WRNG. LT. SW.
STOPLIGHT SW.
HAZARD FLASHER
HAZARD WRNG. SW.
LIGHT SW.
KEY IN DR. SWITCH
L.F. DR. SWITCH
L.R. DR. SWITCH
L. MARKER LT.
F7154