Toyota

1971 Celica

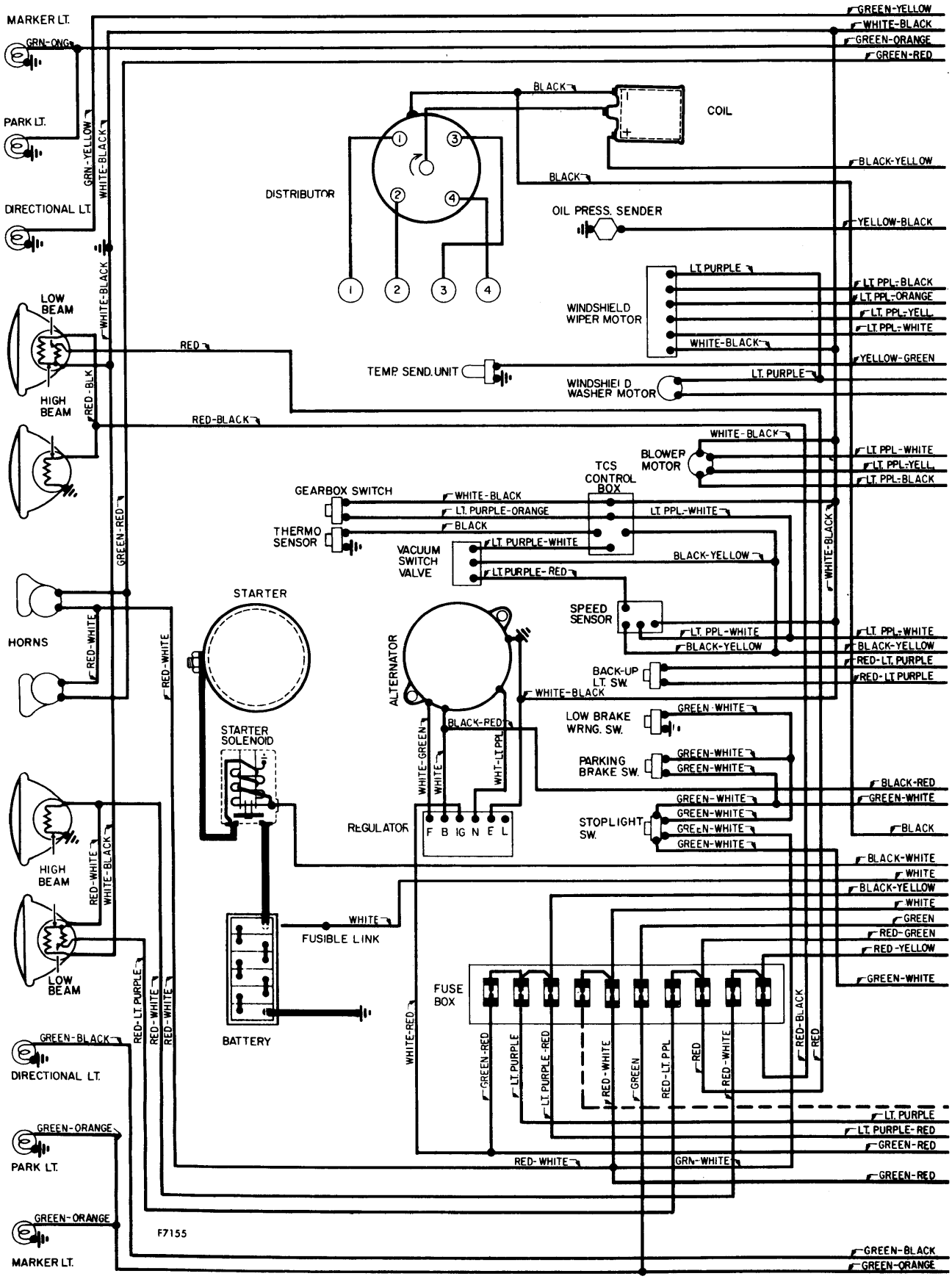

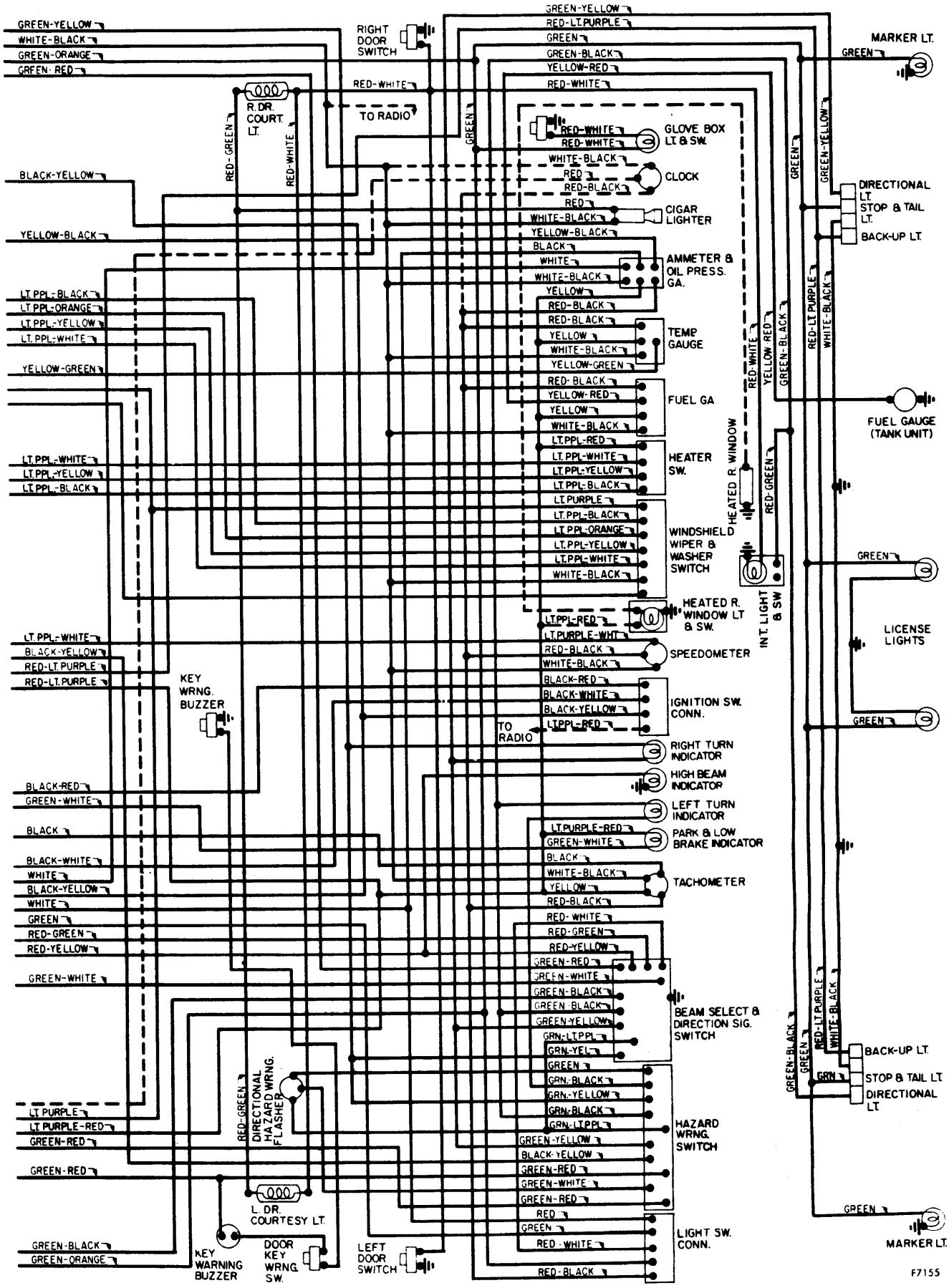
GREEN-YELLOW
WHITE-BLACK
GREEN-ORANGE
GREEN-RED
RIGHT DOOR SWITCH
RED-WHITE
TO RADIO
R. DR. COURT. LT.
RED-GREEN
RED-WHITE
GREEN
GREEN-YELLOW
RED-LT.PURPLE
GREEN
GREEN-BLACK
YELLOW-RED
RED-WHITE
MARKER LT.
GREEN
GLOVE BOX LT & SW.
RED-WHITE
RED-WHITE
WHITE-BLACK
RED
RED-BLACK
CLOCK
RED
WHITE-BLACK
CIGAR LIGHTER
YELLOW-BLACK
BLACK
WHITE
WHITE-BLACK
YELLOW
AMMETER & OIL PRESS. GA.
RED-BLACK
RED-BLACK
YELLOW
WHITE-BLACK
YELLOW-GREEN
TEMP GAUGE
RED-BLACK
YELLOW-RED
YELLOW
WHITE-BLACK
FUEL GA
LT.PPL-RED
LT.PPL-WHITE
LT.PPL-YELLOW
LT.PPL-BLACK
HEATER SW.
LT.PURPLE
LT.PPL-BLACK
LT.PPL-ORANGE
LT.PPL-YELLOW
LT.PPL-WHITE
WHITE-BLACK
WINDSHIELD WIPER & WASHER SWITCH
HEATED R. WINDOW
RED-WHITE
YELLOW-RED
GREEN-BLACK
RED-LT.PURPLE
WHITE-BLACK
GREEN-YELLOW
DIRECTIONAL LT.
STOP & TAIL LT.
BACK-UP LT.
FUEL GAUGE (TANK UNIT)
RED-GREEN
GREEN
LICENSE LIGHTS
GREEN
LT.PPL-RED
HEATED R. WINDOW LT & SW.
INT. LIGHT & SW.
LT.PPL-WHITE
BLACK-YELLOW
RED-LT.PURPLE
RED-LT.PURPLE
LT.PURPLE-WHT
RED-BLACK
WHITE-BLACK
SPEEDOMETER
KEY WRNG. BUZZER
BLACK-RED
BLACK-WHITE
BLACK-YELLOW
LT.PPL-RED
IGNITION SW. CONN.
TO RADIO
GREEN
RIGHT TURN INDICATOR
HIGH BEAM INDICATOR
BLACK-RED
GREEN-WHITE
LEFT TURN INDICATOR
BLACK
LT.PURPLE-RED
GREEN-WHITE
PARK & LOW BRAKE INDICATOR
BLACK-WHITE
WHITE
BLACK
WHITE-BLACK
YELLOW
TACHOMETER
BLACK-YELLOW
WHITE
GREEN
RED-BLACK
RED-GREEN
RED-WHITE
RED-YELLOW
RED-YELLOW
GREEN-WHITE
GREEN-RED
GREEN-WHITE
GREEN-BLACK
GREEN-BLACK
GREEN-YELLOW
GRN-LT.PPL
GRN-YEL
BEAM SELECT & DIRECTION SIG. SWITCH
GREEN-BLACK
GREEN
RED-LT.PURPLE
WHITE-BLACK
BACK-UP LT.
GRN
STOP & TAIL LT.
DIRECTIONAL LT.
LT.PURPLE
LT.PURPLE-RED
GREEN-RED
RED-GREEN
DIRECTIONAL HAZARD WRNG. FLASHER
GREEN
GRN-BLACK
GRN-YELLOW
GRN-BLACK
GRN-LT.PPL
HAZARD WRNG. SWITCH
GREEN-RED
GREEN-YELLOW
BLACK-YELLOW
GREEN-RED
GREEN-WHITE
GREEN-RED
L. DR. COURTESY LT.
RED
GREEN
RED-WHITE
LIGHT SW. CONN.
GREEN
MARKER LT.
GREEN-BLACK
GREEN-ORANGE
KEY WARNING BUZZER
DOOR KEY WRNG. SW.
LEFT DOOR SWITCH
RED-BLACK
F7155