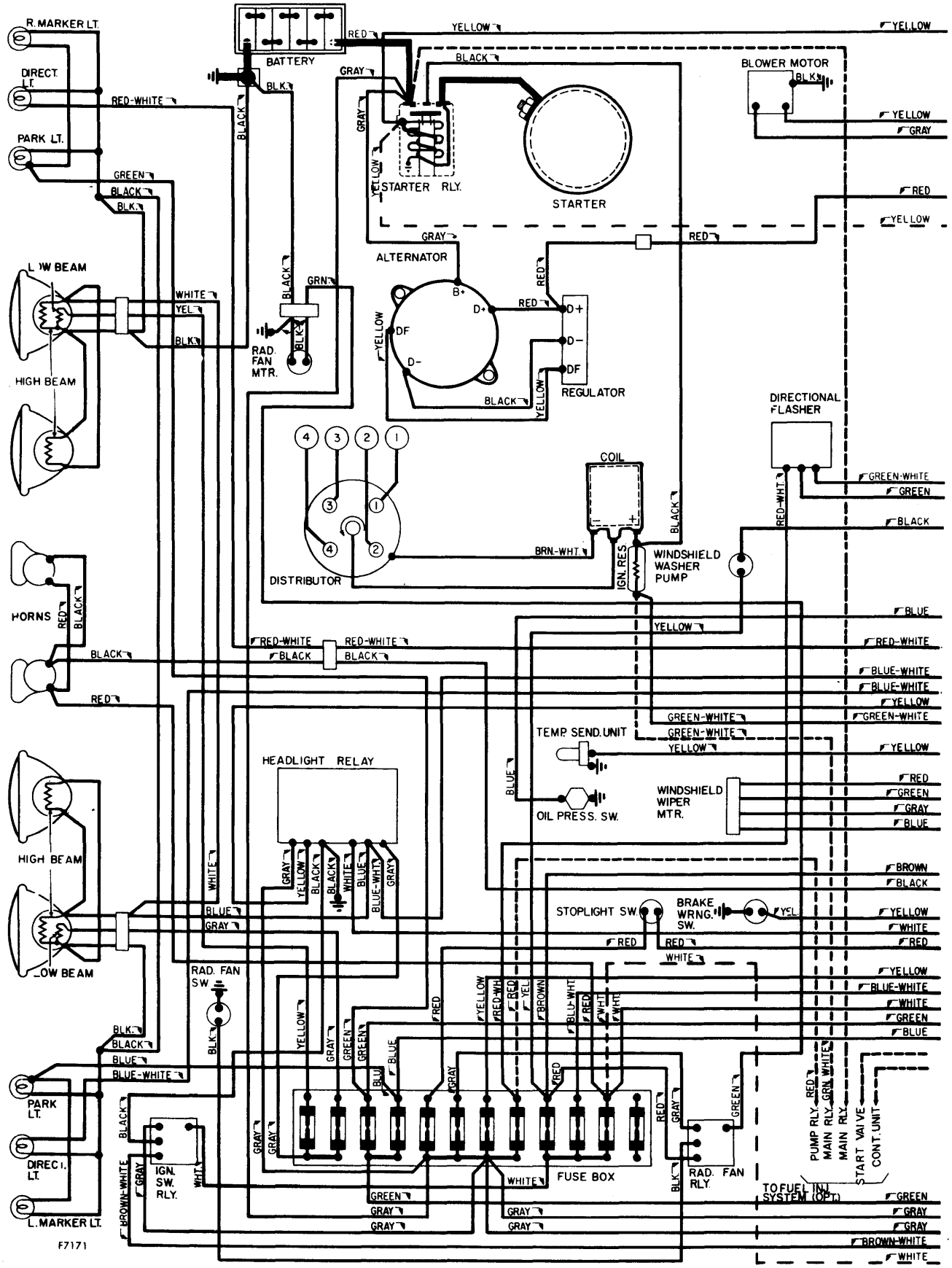
R. MARKER LT.
DIRECT. LT.
PARK LT.
BATTERY
STARTER RLY.
STARTER
BLOWER MOTOR
ALTERNATOR
REGULATOR
RAD. FAN MTR.
LOW BEAM
HIGH BEAM
HORNS
DISTRIBUTOR
COIL
IGN. RES.
WINDSHIELD WASHER PUMP
DIRECTIONAL FLASHER
TEMP. SEND. UNIT
OIL PRESS. SW.
WINDSHIELD WIPER MTR.
HEADLIGHT RELAY
STOPLIGHT SW.
BRAKE WRNG. SW.
RAD. FAN SW.
PARK LT.
DIRECT. LT.
L. MARKER LT.
IGN. SW. RLY.
FUSE BOX
RAD. FAN RLY.
PUMP RLY.
MAIN RLY.
START VALVE CONT. UNIT
TO FUEL INJ. SYSTEM (OPT.)
F7171

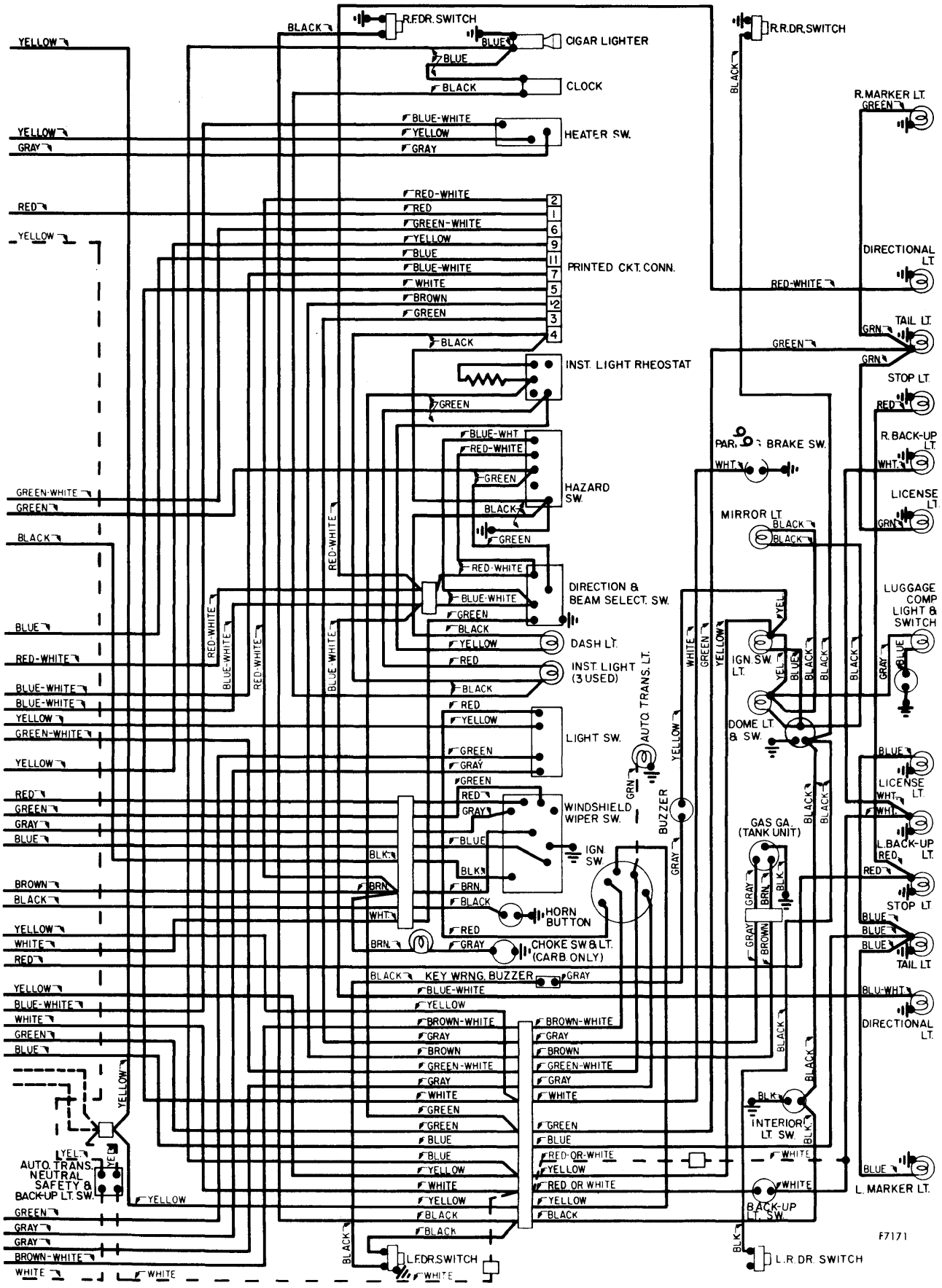
R.F.DR.SWITCH
CIGAR LIGHTER
CLOCK
HEATER SW.
PRINTED CKT. CONN.
INST. LIGHT RHEOSTAT
HAZARD SW.
DIRECTION & BEAM SELECT. SW.
DASH LT.
INST. LIGHT (3 USED)
LIGHT SW.
WINDSHIELD WIPER SW.
IGN SW.
HORN BUTTON
CHOKE SW & LT. (CARB. ONLY)
KEY WRNG. BUZZER
AUTO. TRANS. NEUTRAL SAFETY & BACK-UP LT. SW.
L.F.DR.SWITCH
R.R.DR.SWITCH
R. MARKER LT.
DIRECTIONAL LT.
TAIL LT.
STOP LT.
R. BACK-UP LT.
LICENSE LT.
PARK. & BRAKE SW.
MIRROR LT.
LUGGAGE COMP LIGHT & SWITCH
IGN. SW. LT.
DOME LT. & SW.
AUTO. TRANS. LT.
BUZZER
GAS GA. (TANK UNIT)
L. BACK-UP LT.
INTERIOR LT. SW.
BACK-UP LT. SW.
L. MARKER LT.
L.R. DR. SWITCH
F7171