Peugeot

1971 304

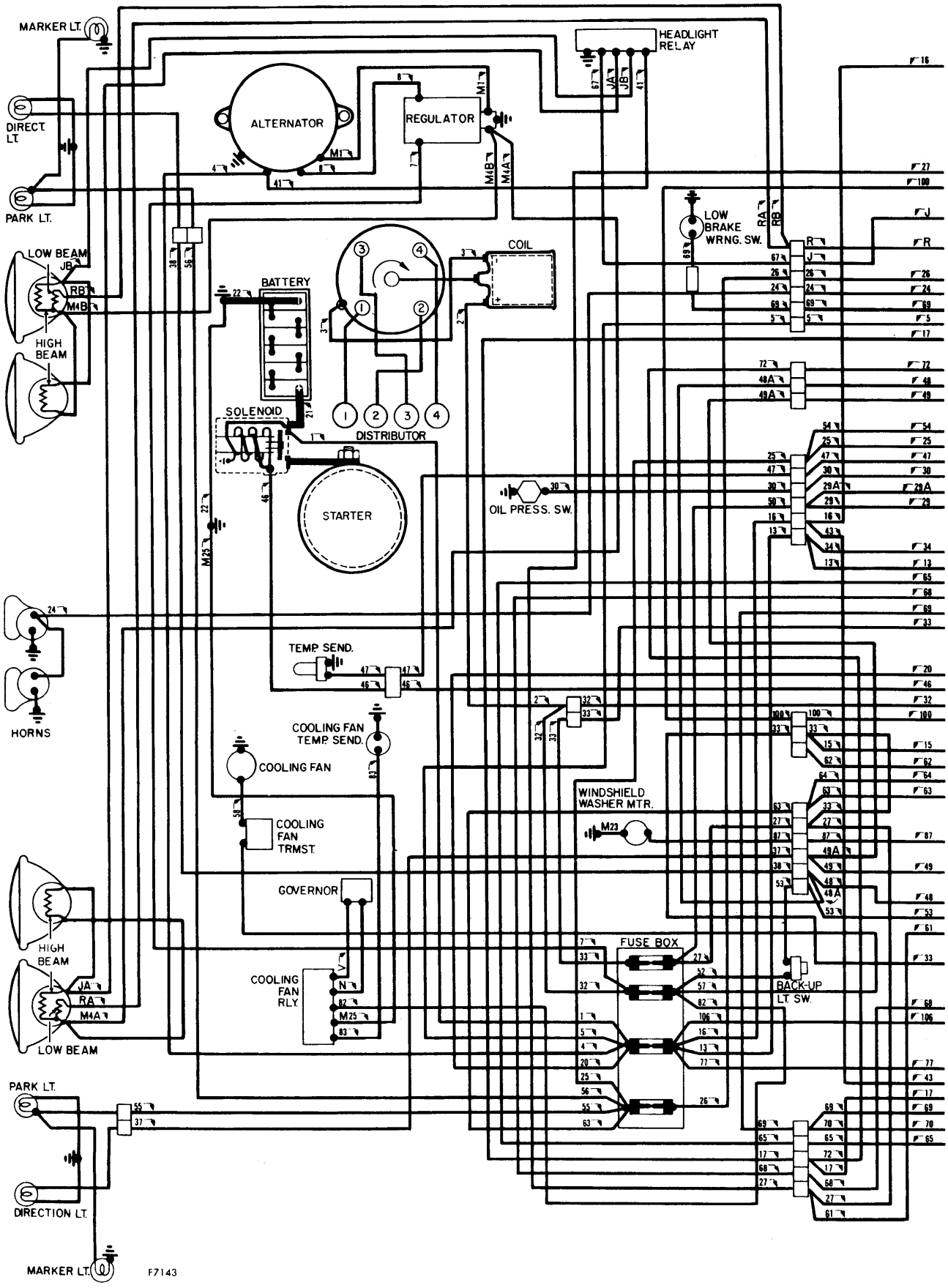

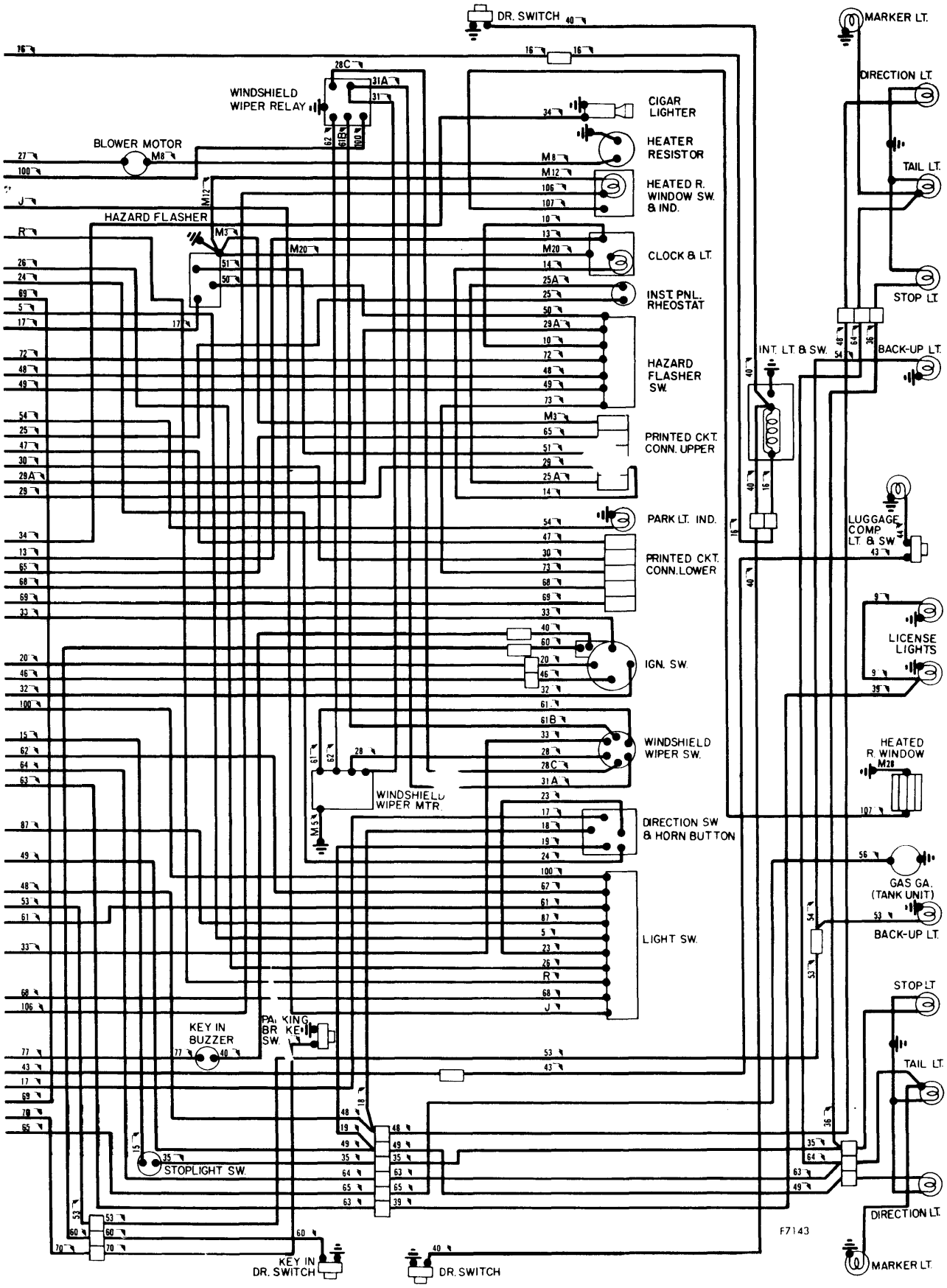
DR. SWITCH
MARKER LT.
DIRECTION LT.
WINDSHIELD WIPER RELAY
CIGAR LIGHTER
HEATER RESISTOR
BLOWER MOTOR
HEATED R. WINDOW SW. & IND.
TAIL LT.
HAZARD FLASHER
CLOCK & LT.
INST. PNL. RHEOSTAT
STOP LT.
INT. LT. & SW.
BACK-UP LT.
HAZARD FLASHER SW.
PRINTED CKT. CONN. UPPER
PARK LT. IND.
LUGGAGE COMP. LT. & SW.
PRINTED CKT. CONN. LOWER
LICENSE LIGHTS
IGN. SW.
WINDSHIELD WIPER SW.
HEATED R. WINDOW
WINDSHIELD WIPER MTR.
DIRECTION SW. & HORN BUTTON
GAS GA. (TANK UNIT)
BACK-UP LT.
LIGHT SW.
STOP LT.
KEY IN BUZZER
PARKING BR. KEY SW.
TAIL LT.
STOPLIGHT SW.
DIRECTION LT.
F7143
KEY IN DR. SWITCH
DR. SWITCH
MARKER LT.