Mazda

1971 616

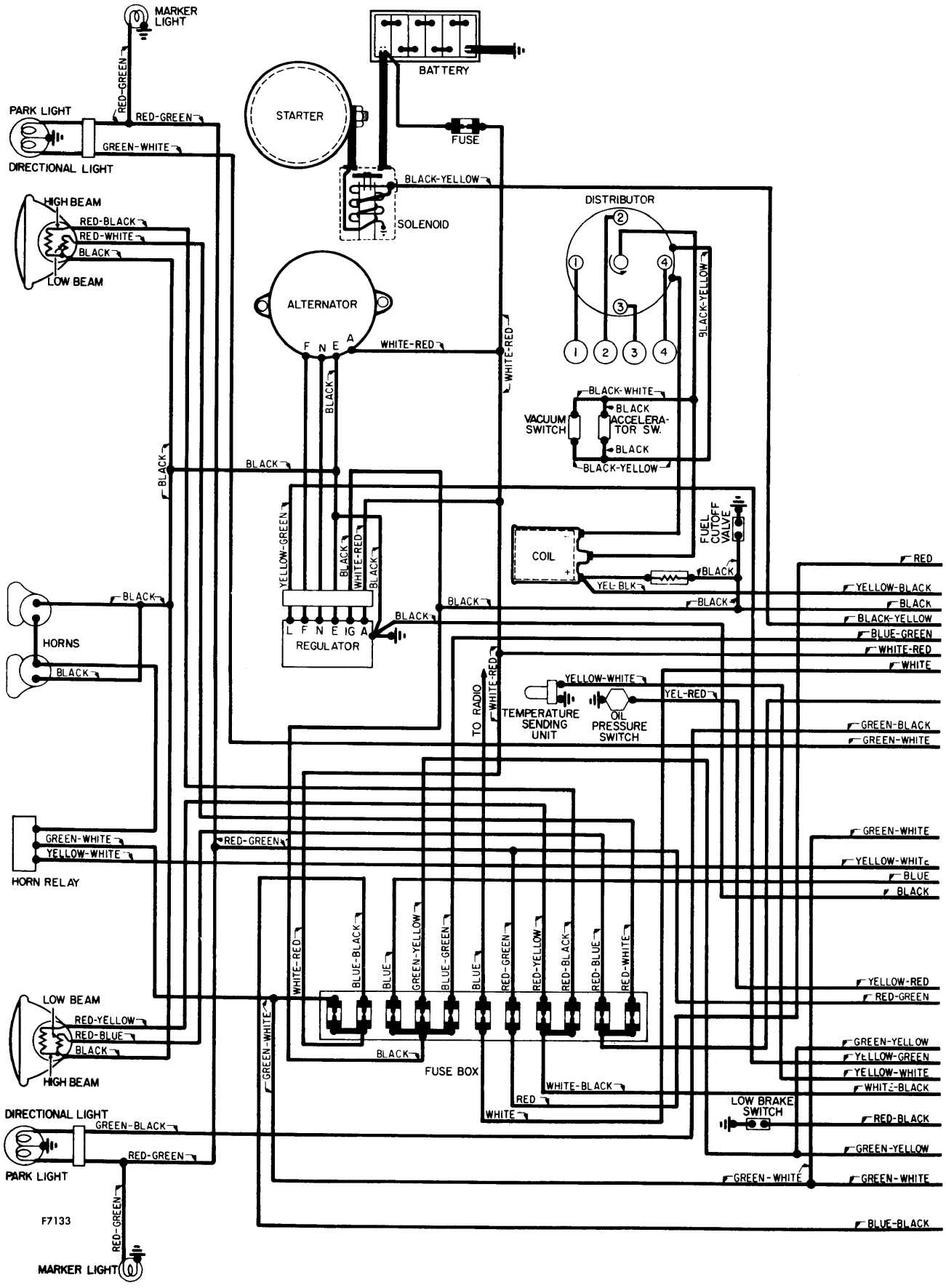

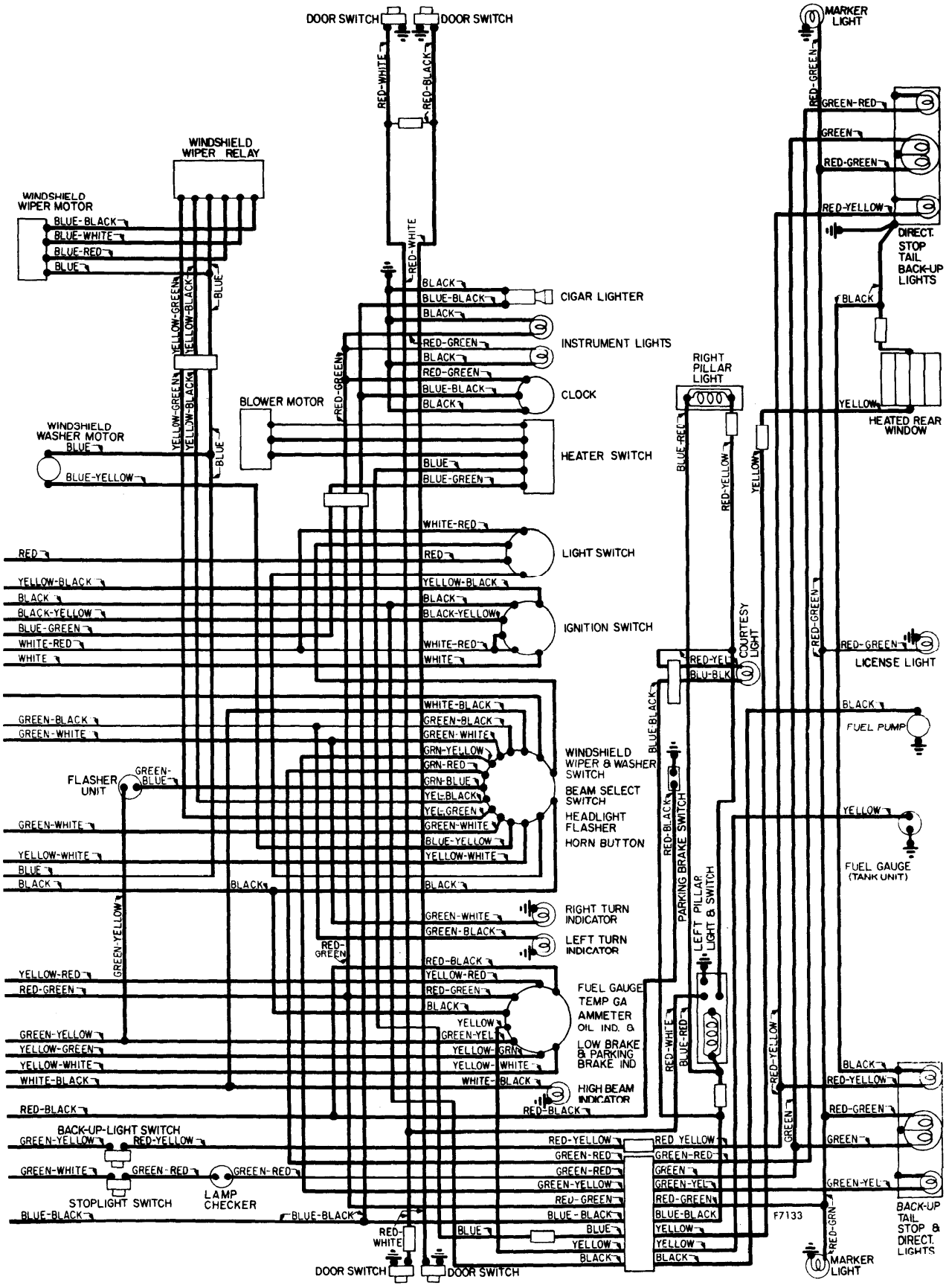
DOOR SWITCH
DOOR SWITCH
MARKER LIGHT
WINDSHIELD WIPER RELAY
WINDSHIELD WIPER MOTOR
BLUE-BLACK
BLUE-WHITE
BLUE-RED
BLUE
YELLOW-GREEN
YELLOW-BLACK
BLUE
RED-WHITE
RED-BLACK
RED-WHITE
BLACK
BLUE-BLACK
BLACK
CIGAR LIGHTER
RED-GREEN
BLACK
RED-GREEN
BLUE-BLACK
BLACK
INSTRUMENT LIGHTS
CLOCK
BLOWER MOTOR
RED-GREEN
WINDSHIELD WASHER MOTOR
BLUE
BLUE-YELLOW
BLUE
HEATER SWITCH
BLUE
BLUE-GREEN
WHITE-RED
RED
LIGHT SWITCH
YELLOW-BLACK
BLACK
BLACK-YELLOW
BLUE-GREEN
WHITE-RED
WHITE
YELLOW-BLACK
BLACK
BLACK-YELLOW
WHITE-RED
WHITE
IGNITION SWITCH
GREEN-BLACK
GREEN-WHITE
WHITE-BLACK
GREEN-BLACK
GREEN-WHITE
GRN-YELLOW
GRN-RED
GRN-BLUE
YEL-BLACK
YEL-GREEN
GREEN-WHITE
BLUE-YELLOW
YELLOW-WHITE
WINDSHIELD WIPER & WASHER SWITCH
BEAM SELECT SWITCH
HEADLIGHT FLASHER
HORN BUTTON
FLASHER UNIT
GREEN-BLUE
GREEN-WHITE
YELLOW-WHITE
BLUE
BLACK
BLACK
BLACK
GREEN-YELLOW
GREEN-WHITE
GREEN-BLACK
RIGHT TURN INDICATOR
LEFT TURN INDICATOR
RED-GREEN
RED-BLACK
YELLOW-RED
RED-GREEN
BLACK
YELLOW
GREEN-YEL
YELLOW-GRN
YELLOW-WHITE
WHITE-BLACK
FUEL GAUGE
TEMP GA
AMMETER
OIL IND. &
LOW BRAKE & PARKING BRAKE IND
HIGH BEAM INDICATOR
RED-BLACK
YELLOW-RED
RED-GREEN
GREEN-YELLOW
YELLOW-GREEN
YELLOW-WHITE
WHITE-BLACK
RED-BLACK
BACK-UP-LIGHT SWITCH
GREEN-YELLOW
RED-YELLOW
GREEN-WHITE
GREEN-RED
GREEN-RED
STOPLIGHT SWITCH
LAMP CHECKER
BLUE-BLACK
BLUE-BLACK
RED-WHITE
DOOR SWITCH
DOOR SWITCH
RIGHT PILLAR LIGHT
BLUE-RED
RED-YELLOW
YELLOW
COURTESY LIGHT
RED-YEL
BLU-BLK
BLUE-BLACK
RED-BLACK
PARKING BRAKE SWITCH
LEFT PILLAR LIGHT & SWITCH
RED-WHITE
BLUE-RED
RED-YELLOW
GREEN
RED YELLOW
GREEN-RED
GREEN
GREEN-YEL
RED-GREEN
BLUE-BLACK
YELLOW
YELLOW
BLACK
F7133
RED-GREEN
GREEN-RED
GREEN
RED-GREEN
RED-YELLOW
DIRECT. STOP TAIL BACK-UP LIGHTS
BLACK
YELLOW
HEATED REAR WINDOW
RED-GREEN
LICENSE LIGHT
BLACK
FUEL PUMP
YELLOW
FUEL GAUGE (TANK UNIT)
BLACK
RED-YELLOW
RED-GREEN
GREEN
GREEN-YEL
BACK-UP TAIL STOP & DIRECT. LIGHTS
RED-GRN
MARKER LIGHT