Jaguar

1971 XKE (V-12)

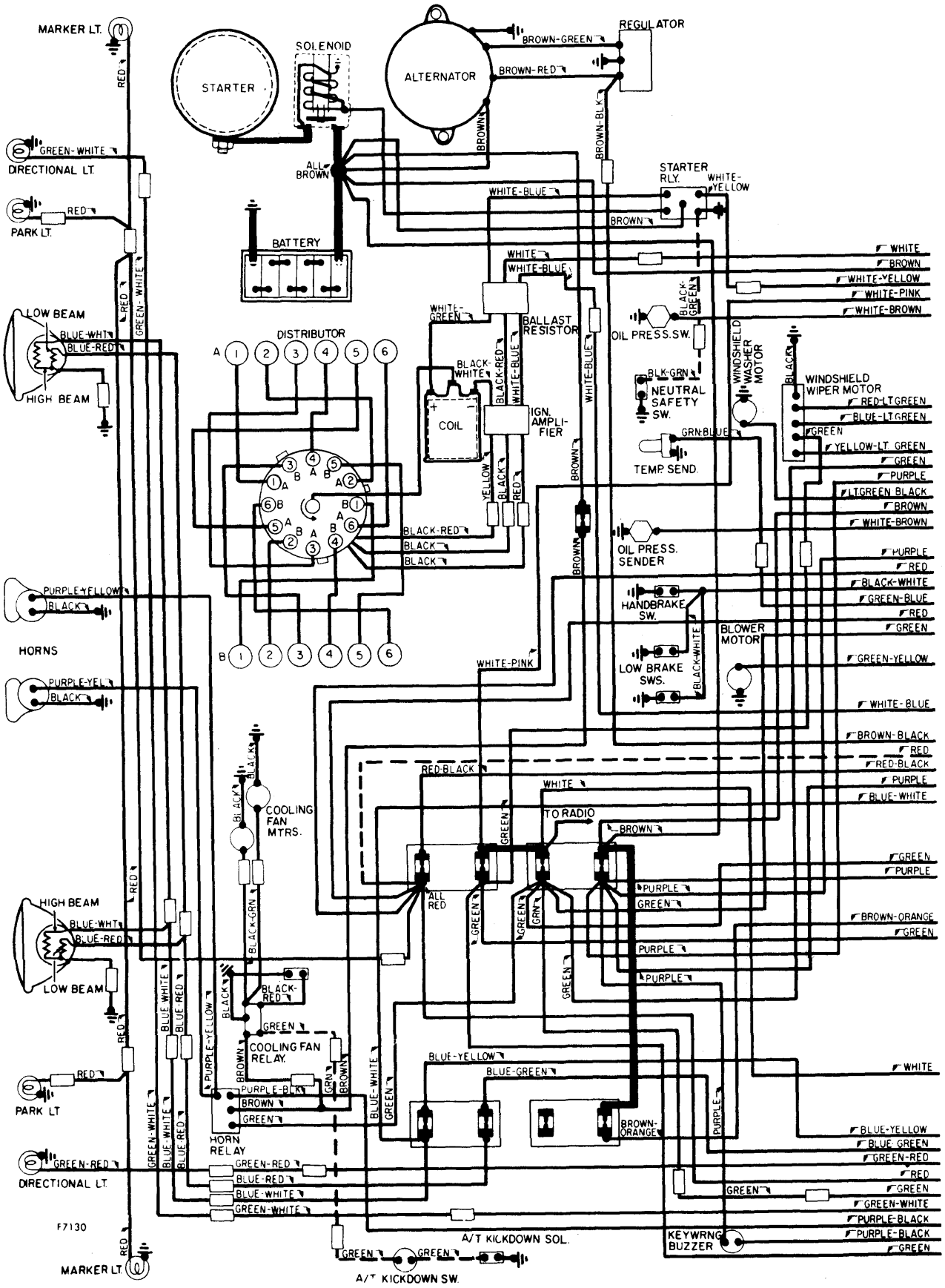

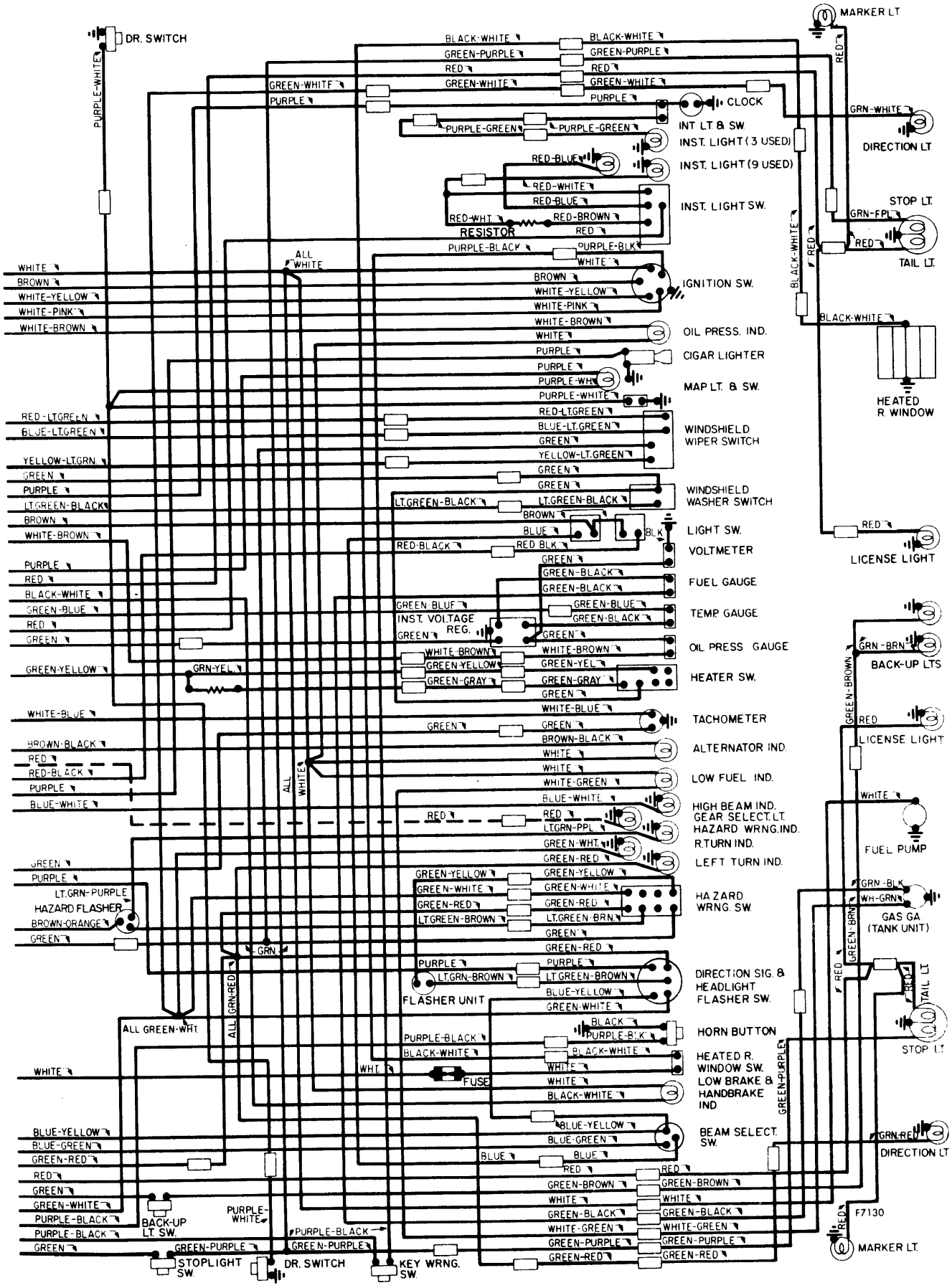
DR. SWITCH
PURPLE-WHITE
MARKER LT.
RED
BLACK-WHITE
GREEN-PURPLE
RED
GREEN-WHITE
PURPLE
CLOCK
GRN-WHITE
DIRECTION LT.
PURPLE-GREEN
INT LT. & SW.
INST. LIGHT (3 USED)
INST. LIGHT (9 USED)
RED-BLUE
RED-WHITE
INST. LIGHT SW.
STOP LT.
GRN-PPL
RED-WHT.
RESISTOR
RED-BROWN
TAIL LT.
PURPLE-BLACK
PURPLE-BLK
ALL WHITE
WHITE
BROWN
WHITE-YELLOW
WHITE-PINK
WHITE-BROWN
IGNITION SW.
OIL PRESS. IND.
CIGAR LIGHTER
PURPLE-WHT.
MAP LT. & SW.
HEATED R. WINDOW
RED-LT.GREEN
BLUE-LT.GREEN
GREEN
YELLOW-LT.GRN.
YELLOW-LT.GREEN
WINDSHIELD WIPER SWITCH
LT.GREEN-BLACK
WINDSHIELD WASHER SWITCH
LIGHT SW.
RED-BLACK
RED BLK.
VOLTMETER
LICENSE LIGHT
GREEN-BLACK
FUEL GAUGE
GREEN-BLUE
TEMP. GAUGE
INST. VOLTAGE REG.
OIL PRESS. GAUGE
GRN-BRN
BACK-UP LTS
GREEN-YELLOW
GRN-YEL
GREEN-GRAY
HEATER SW.
WHITE-BLUE
TACHOMETER
BROWN-BLACK
ALTERNATOR IND.
LICENSE LIGHT
LOW FUEL IND.
BLUE-WHITE
HIGH BEAM IND.
GEAR SELECT. LT.
LT.GRN-PPL
HAZARD WRNG. IND.
GREEN-WHT.
R. TURN IND.
FUEL PUMP
GREEN-RED
LEFT TURN IND.
LT.GRN-PURPLE
HAZARD FLASHER
BROWN-ORANGE
HAZARD WRNG. SW.
GRN-BLK
WH-GRN
GAS GA. (TANK UNIT)
GRN.
ALL GRN-RED
DIRECTION SIG. & HEADLIGHT FLASHER SW.
LT.GRN-BROWN
FLASHER UNIT
BLUE-YELLOW
TAIL LT.
ALL GREEN-WHT.
HORN BUTTON
STOP LT.
WHT.
FUSE
HEATED R. WINDOW SW.
LOW BRAKE & HANDBRAKE IND.
BEAM SELECT. SW.
GRN-RED
DIRECTION LT.
BLUE
BACK-UP LT. SW.
PURPLE-WHITE
PURPLE-BLACK
GREEN-PURPLE
STOPLIGHT SW.
DR. SWITCH
KEY WRNG. SW.
F7130
MARKER LT.