# Jaguar

## 1971 XJ6 Sedan

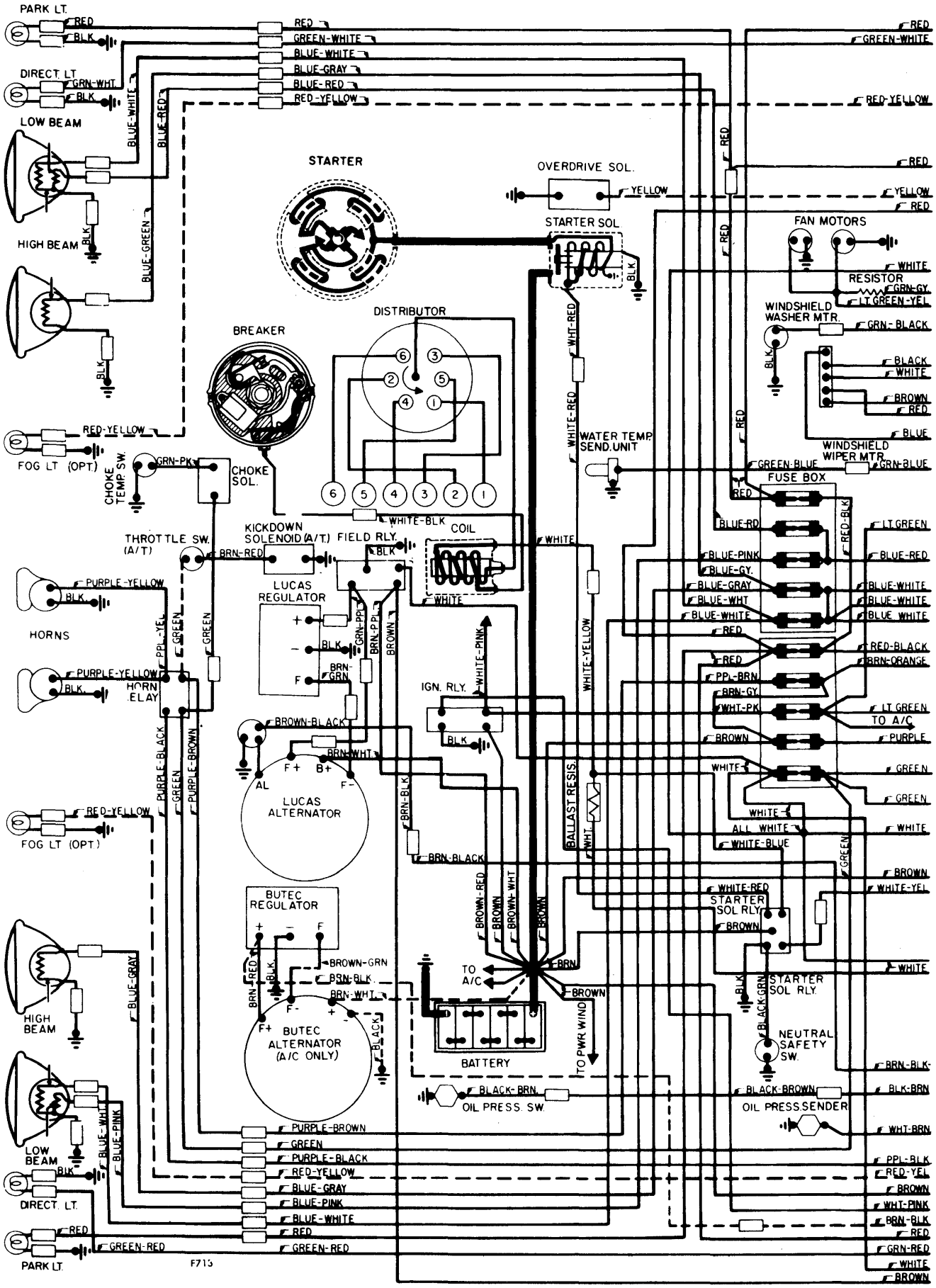

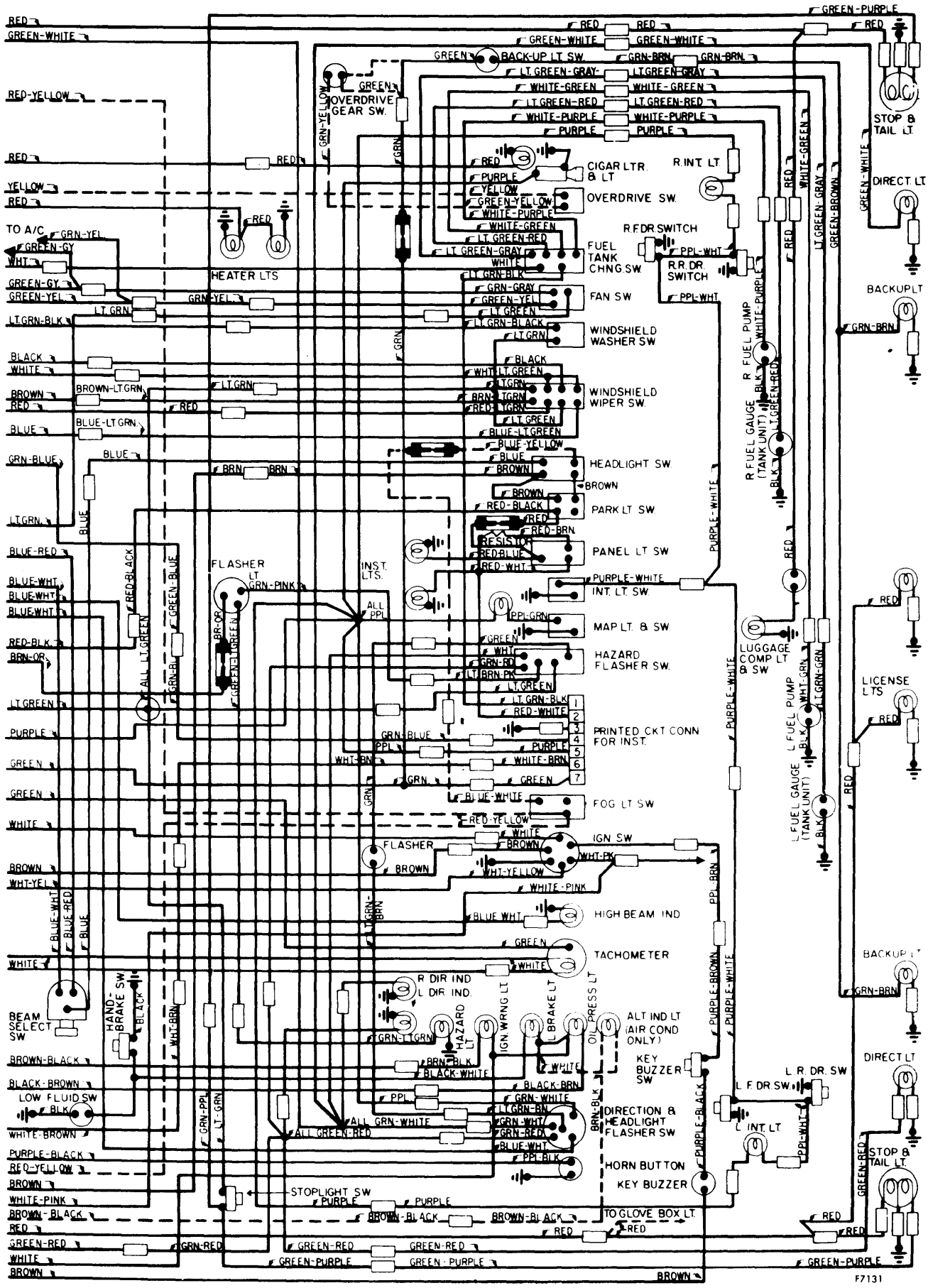
BACK-UP LT. SW.
OVERDRIVE GEAR SW.
CIGAR LTR. & LT
R. INT. LT.
OVERDRIVE SW.
R.F.DR SWITCH
R.R. DR. SWITCH
FUEL TANK CHNG. SW.
FAN SW.
WINDSHIELD WASHER SW.
WINDSHIELD WIPER SW.
HEADLIGHT SW.
PARK LT. SW.
PANEL LT. SW.
INT. LT. SW.
MAP LT. & SW.
HAZARD FLASHER SW.
PRINTED CKT CONN FOR INST.
FOG LT SW.
IGN. SW.
HIGH BEAM IND.
TACHOMETER
R. DIR. IND.
L. DIR. IND.
ALT IND LT (AIR COND ONLY)
KEY BUZZER SW.
DIRECTION & HEADLIGHT FLASHER SW.
HORN BUTTON
KEY BUZZER
STOPLIGHT SW.
TO GLOVE BOX LT.
HEATER LTS.
FLASHER
INST. LTS.
BEAM SELECT SW.
HAND-BRAKE SW.
LOW FLUID SW.
TO A/C
R. FUEL PUMP
R. FUEL GAUGE (TANK UNIT)
L. FUEL PUMP
L. FUEL GAUGE (TANK UNIT)
LUGGAGE COMP LT & SW.
L. R. DR. SW.
L. F. DR. SW.
L. INT. LT.
STOP & TAIL LT.
DIRECT LT.
BACKUP LT.
LICENSE LTS.
HAZARD LT.
IGN. WRNG LT.
L. BRAKE LT.
OIL PRESS LT.
F7131