Alfa Romeo

1971 1750 Berlina

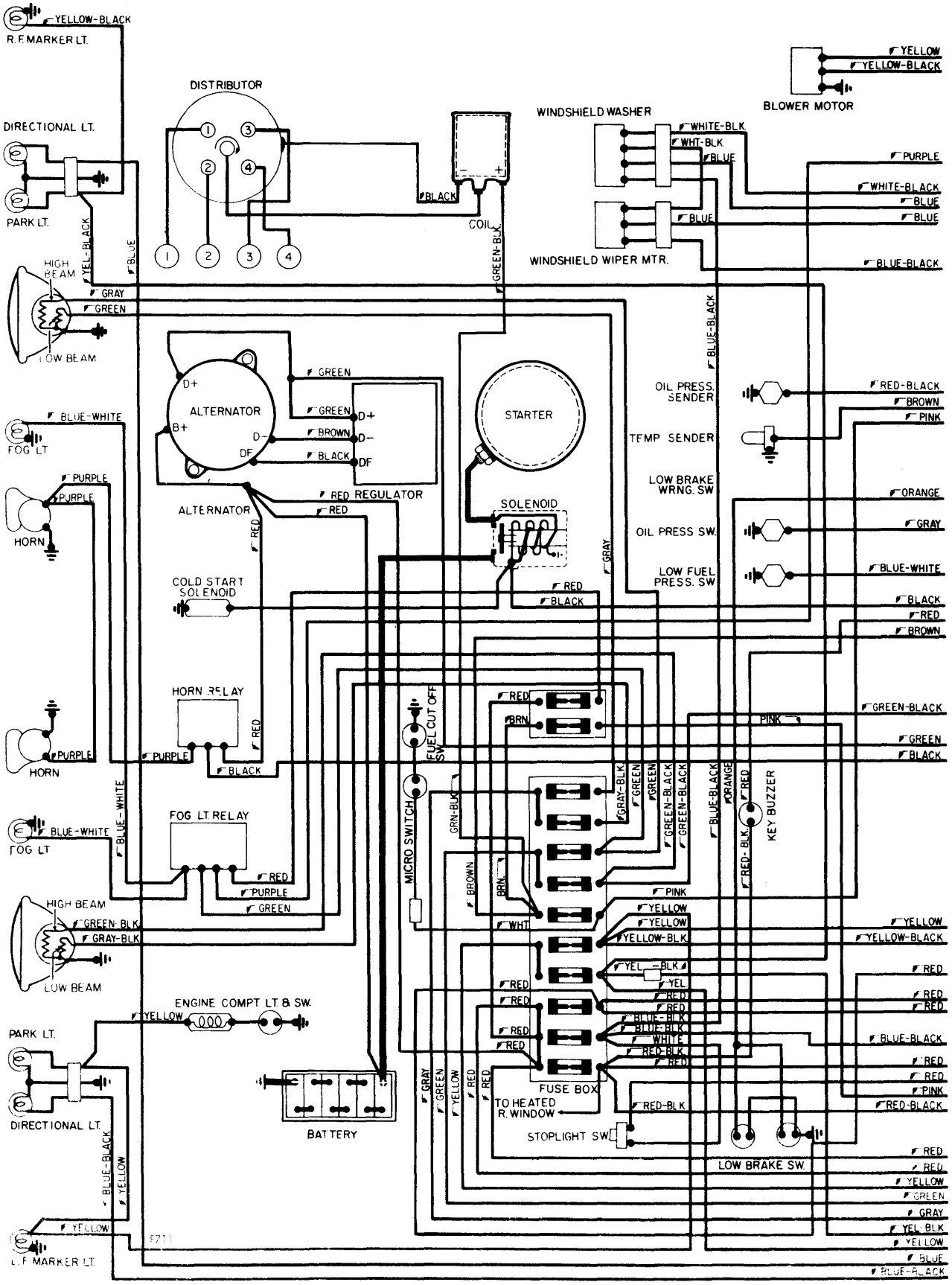

Copyright (c) 2001 Mitchell Repair Information Company

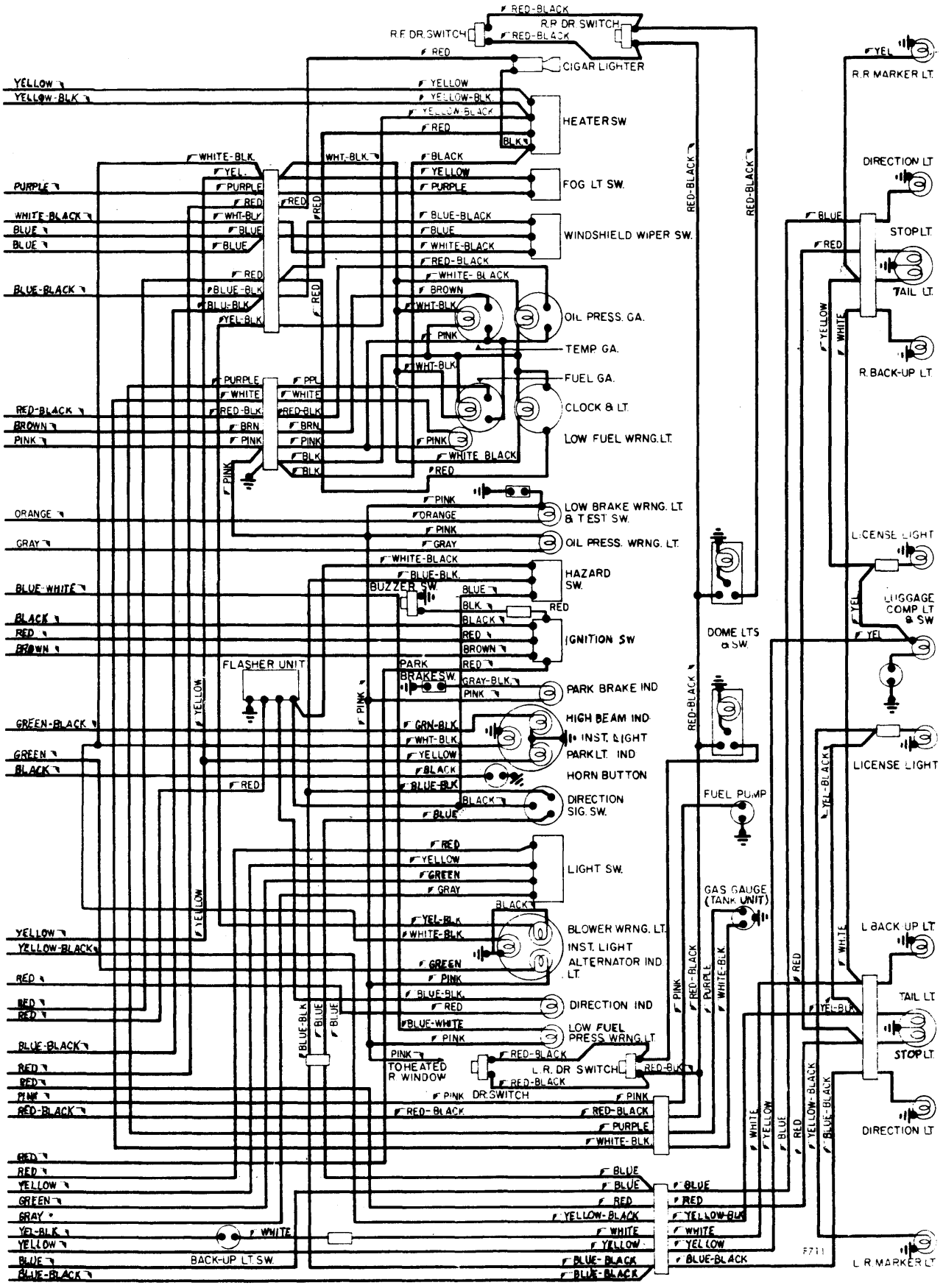
R.F. DR. SWITCH
R.R. DR SWITCH
CIGAR LIGHTER
HEATER SW.
FOG LT SW.
WINDSHIELD WIPER SW.
OIL PRESS. GA.
TEMP GA.
FUEL GA.
CLOCK & LT.
LOW FUEL WRNG. LT.
LOW BRAKE WRNG. LT. & TEST SW.
OIL PRESS. WRNG. LT.
HAZARD SW.
BUZZER SW.
IGNITION SW
FLASHER UNIT
PARK BRAKE SW.
PARK BRAKE IND
HIGH BEAM IND.
INST. LIGHT
PARK LT. IND
HORN BUTTON
DIRECTION SIG. SW.
LIGHT SW.
BLOWER WRNG. LT.
INST. LIGHT
ALTERNATOR IND LT.
DIRECTION IND
LOW FUEL PRESS. WRNG. LT.
TO HEATED R. WINDOW
L.R. DR SWITCH
DR. SWITCH
BACK-UP LT. SW.
DOME LTS & SW.
FUEL PUMP
GAS GAUGE (TANK UNIT)
R.R. MARKER LT.
DIRECTION LT.
STOP LT.
TAIL LT.
R. BACK-UP LT.
LICENSE LIGHT
LUGGAGE COMP LT & SW
LICENSE LIGHT
L. BACK UP LT.
TAIL LT.
STOP LT.
DIRECTION LT.
L.R. MARKER LT.
F711