Mercedes-Benz

1968-70 200, 200D, 220, 220D & 230

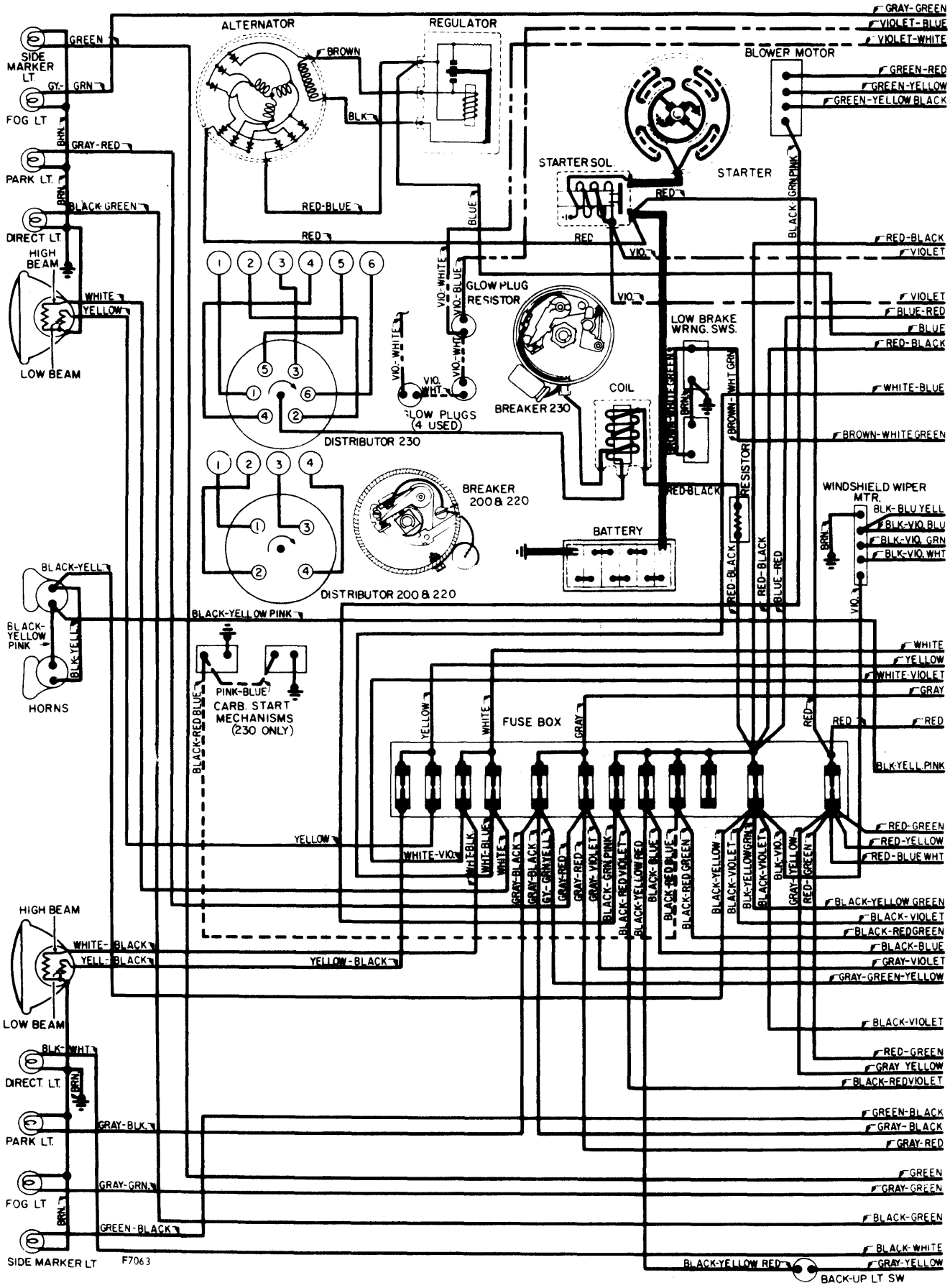

Copyright (c) 2001 Mitchell Repair Information Company

Mercedes-Benz

1968-70 200, 200D, 220, 220D & 230

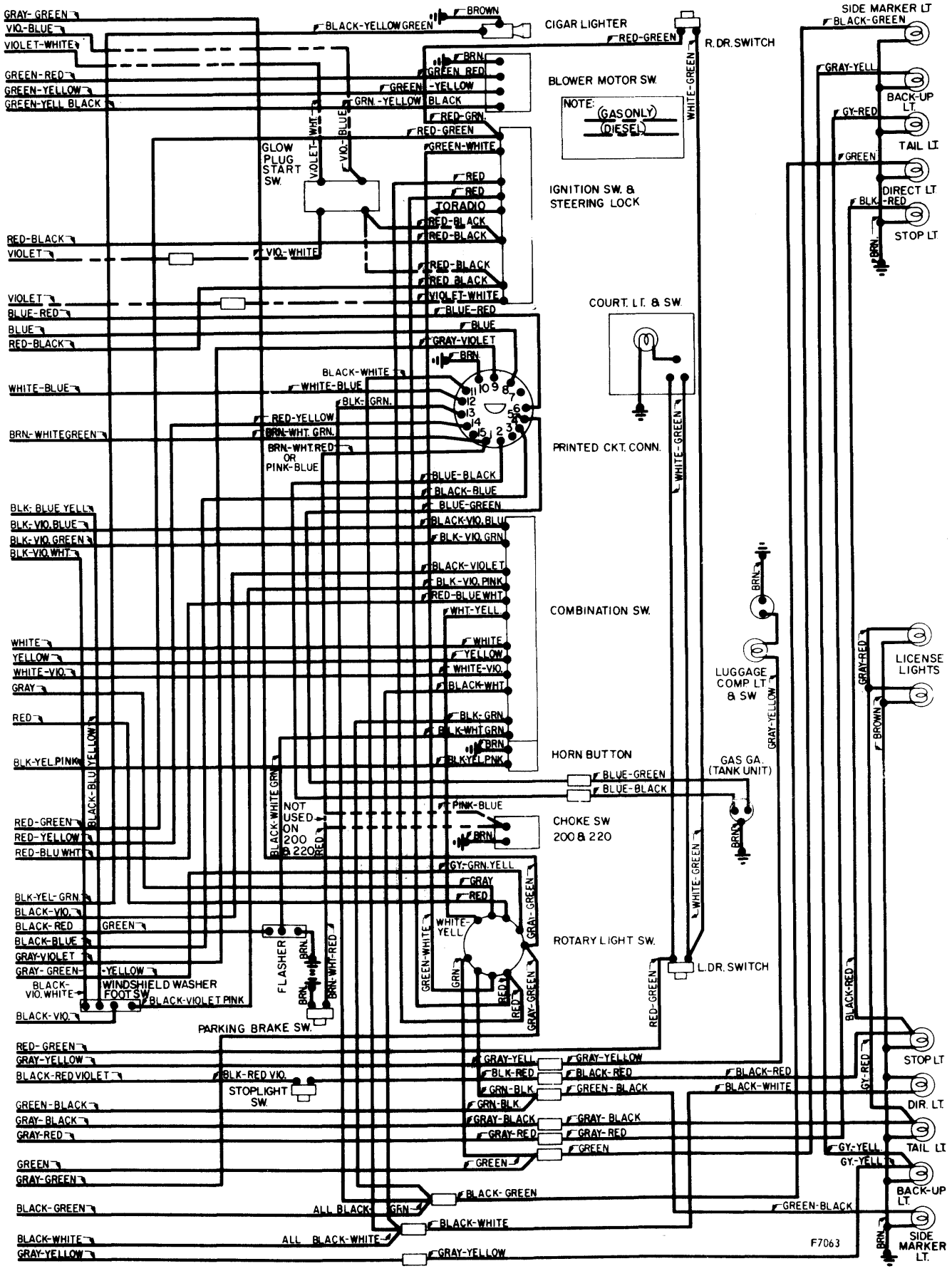

Copyright (c) 2001 Mitchell Repair Information Company