Fiat

124 Sport Coupe

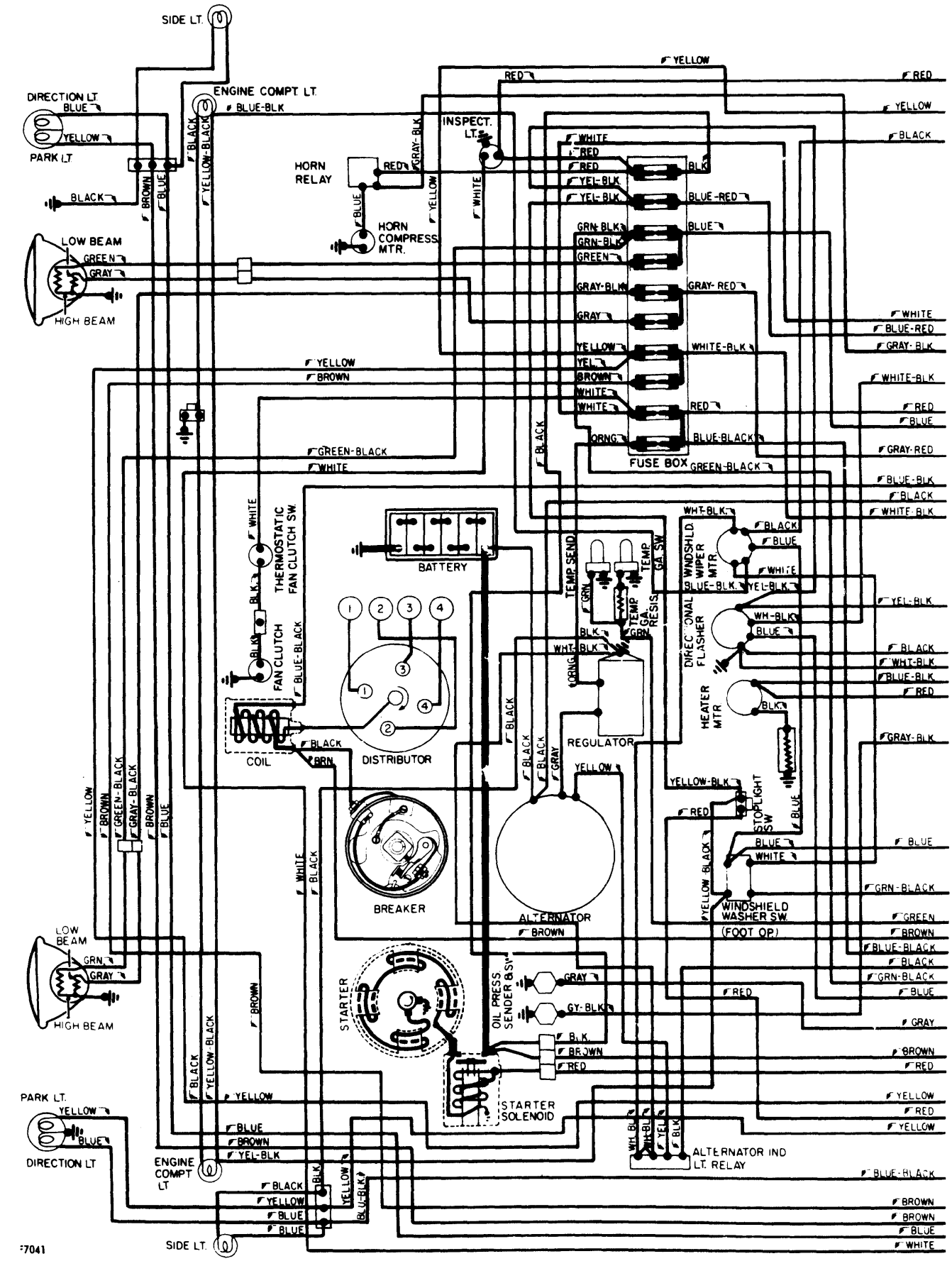

Copyright (c) 2001 Mitchell Repair Information Company

Fiat

124 Sport Coupe

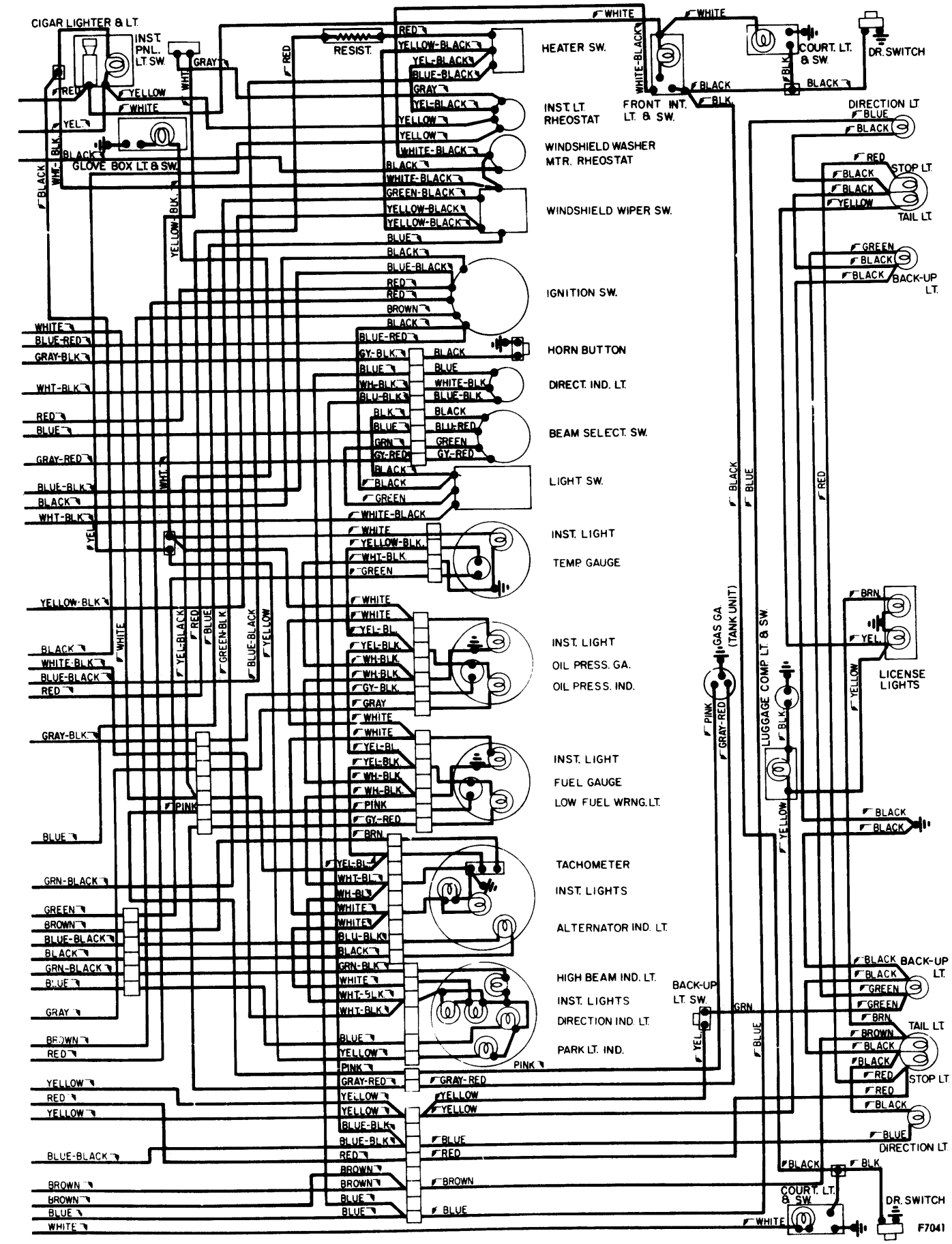

Copyright (c) 2001 Mitchell Repair Information Company