Fiat

124 Sedan & Station Wagon

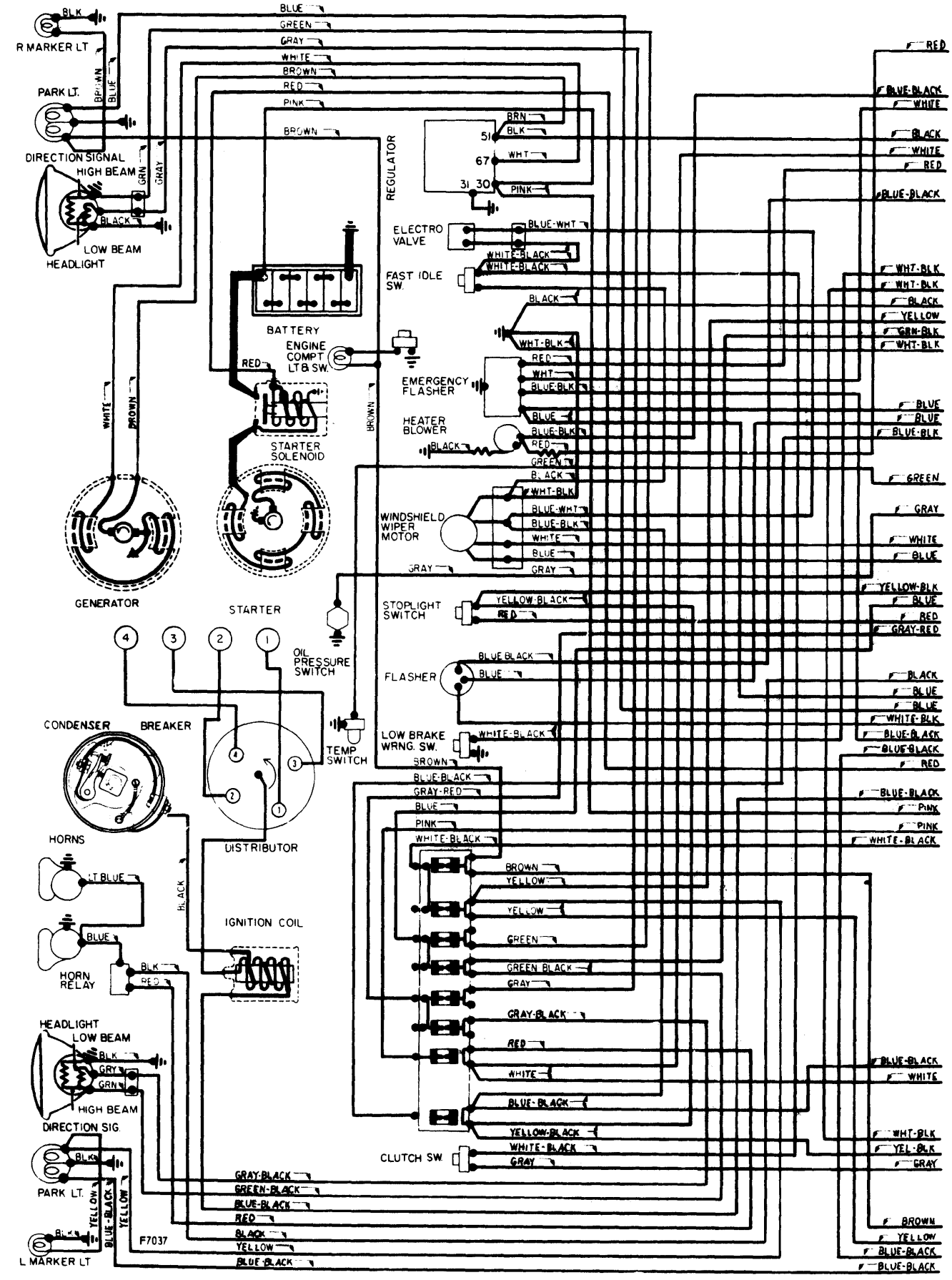

Copyright (c) 2001 Mitchell Repair Information Company

Fiat

124 Sedan & Station Wagon

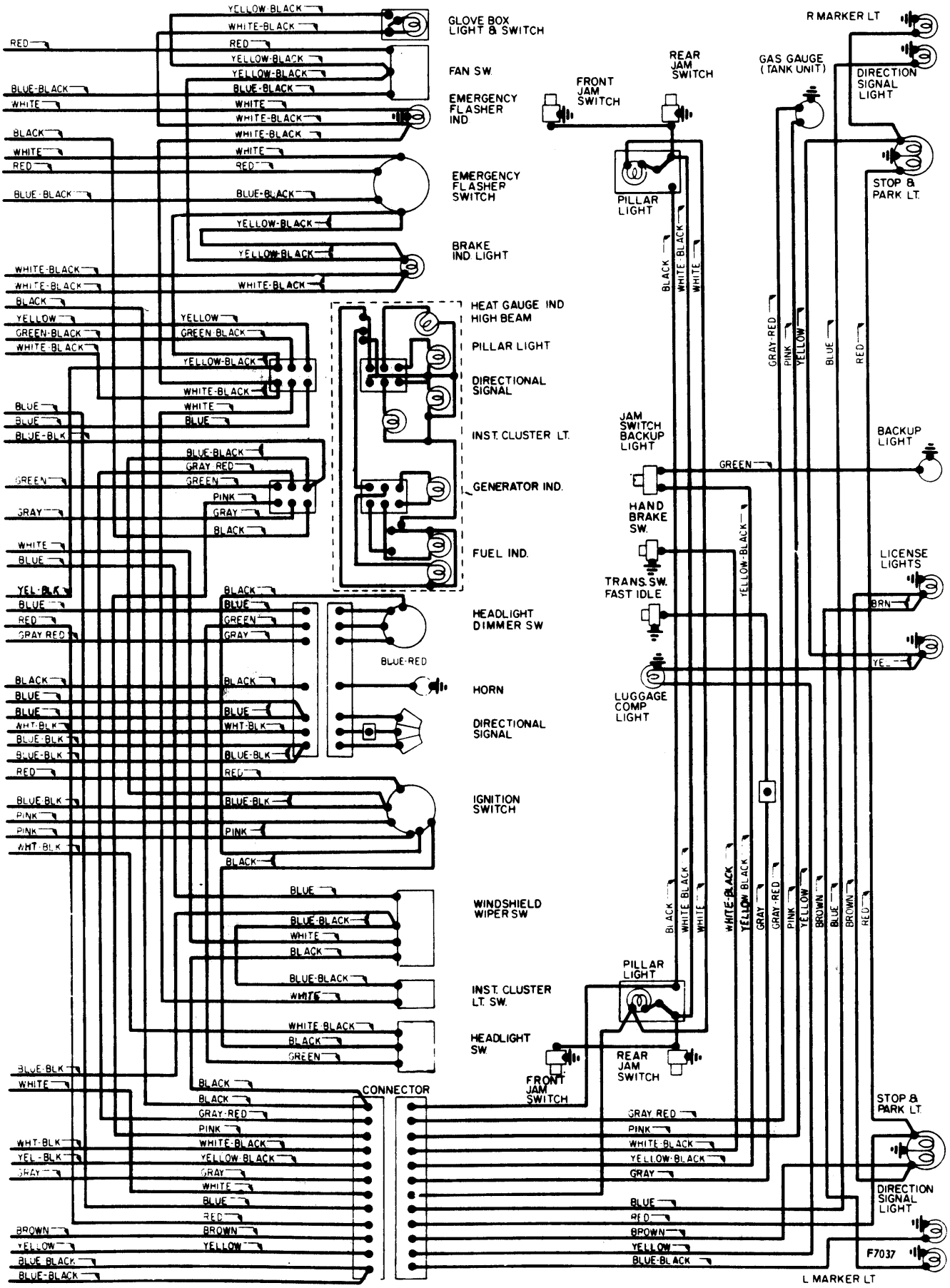

Copyright (c) 2001 Mitchell Repair Information Company