Datsun

510 Sedan

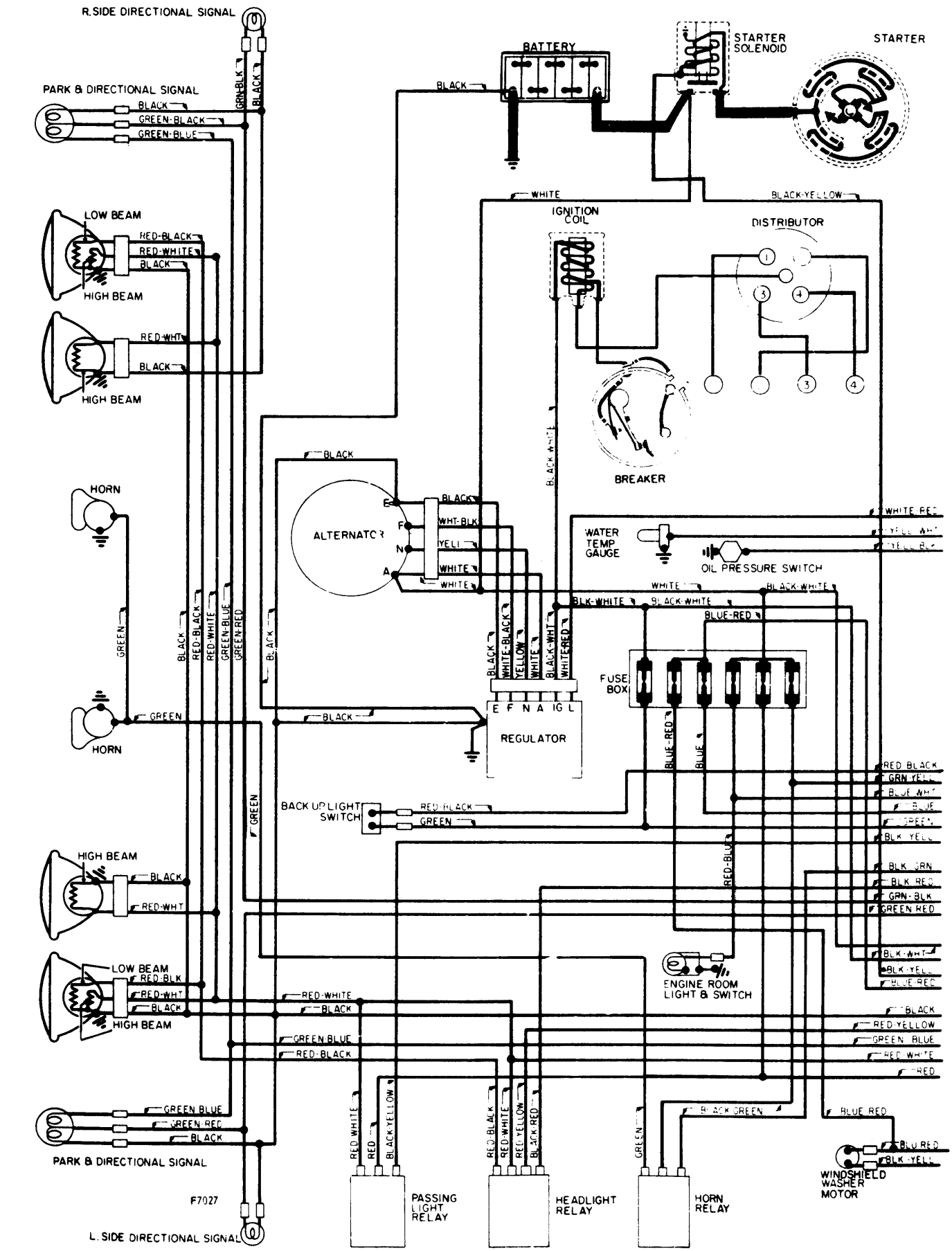

Copyright (c) 2001 Mitchell Repair Information Company

Datsun

510 Sedan

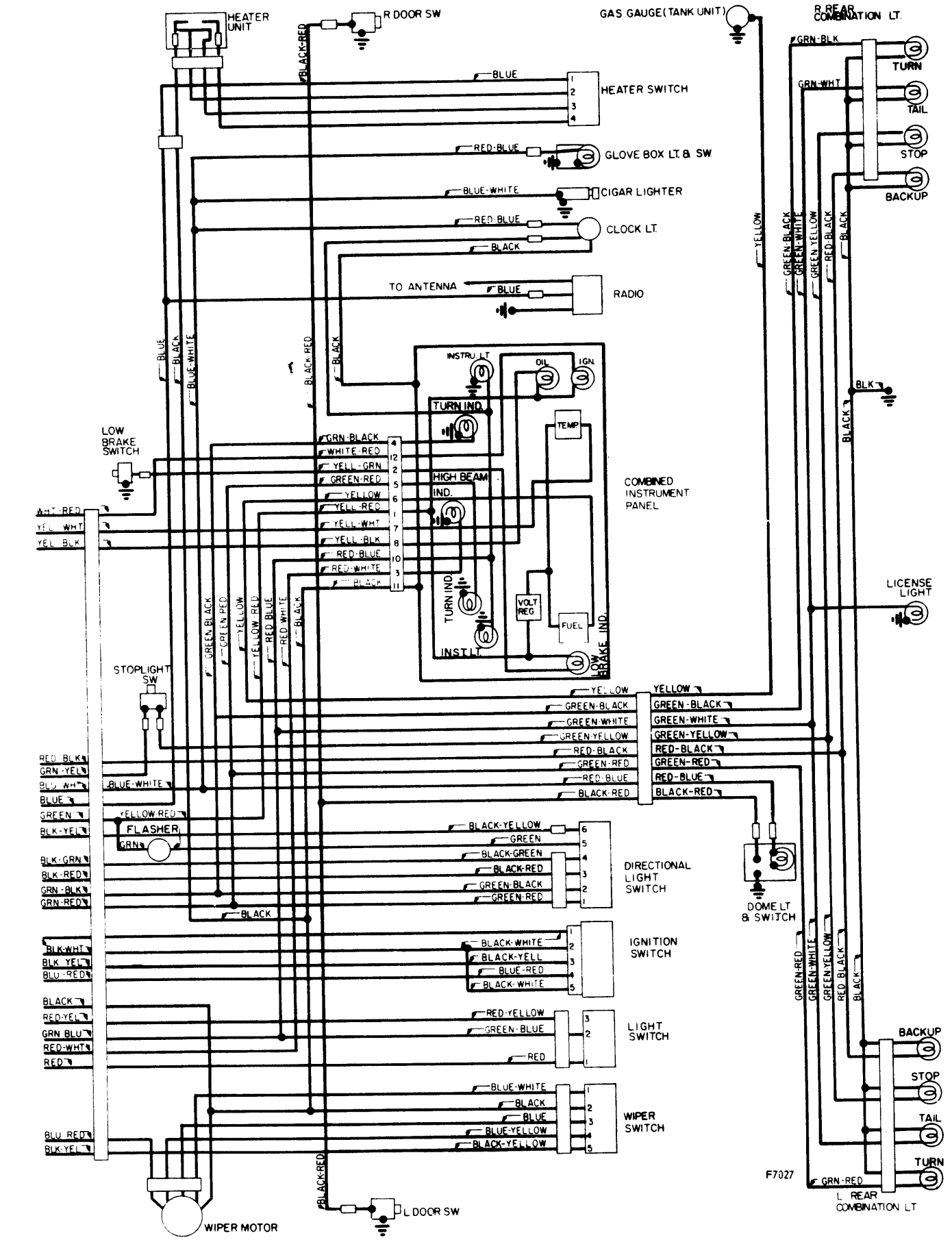

Copyright (c) 2001 Mitchell Repair Information Company