Cortina

1967 Model

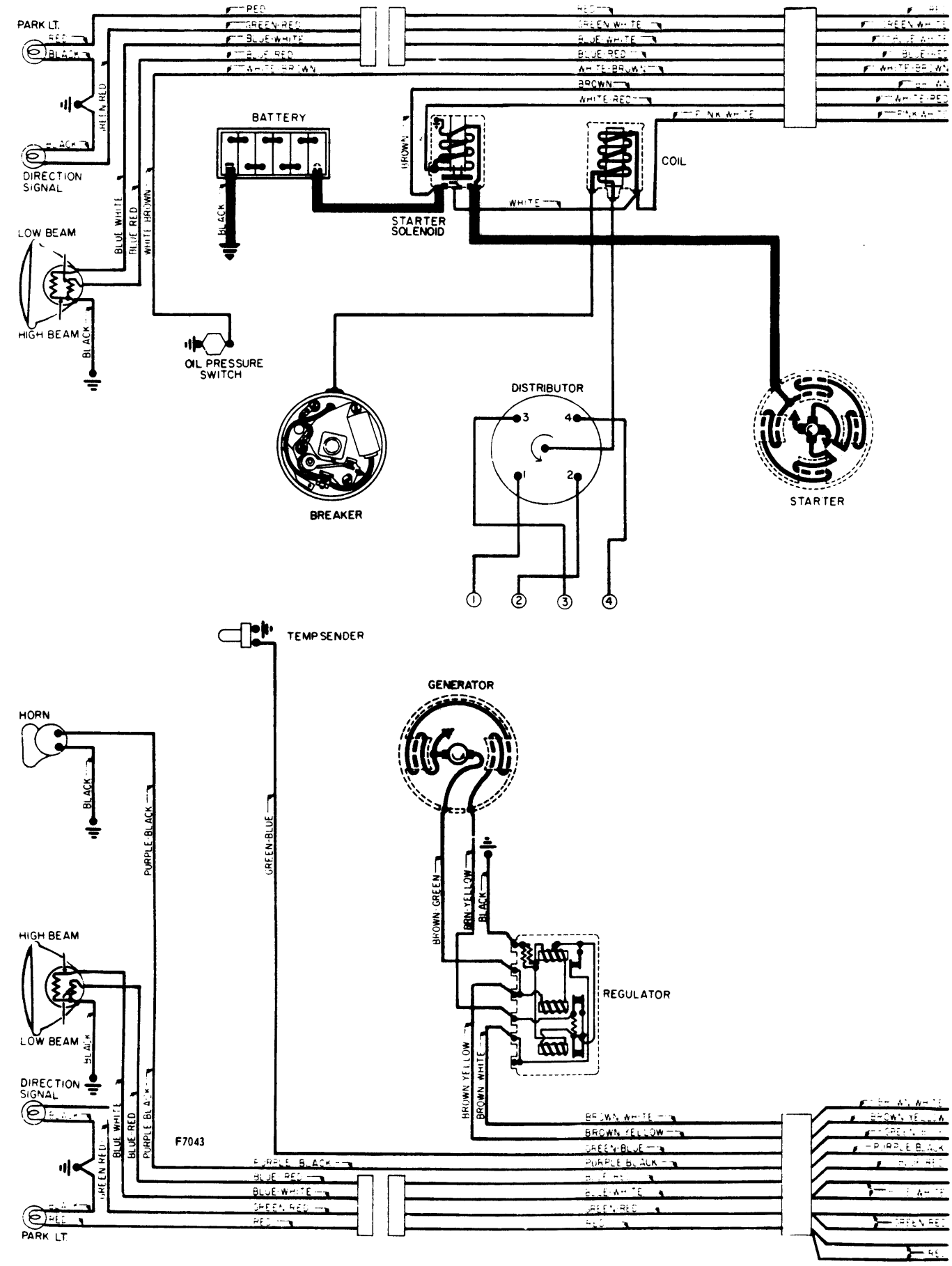

Copyright (c) 2001 Mitchell Repair Information Company

Cortina

1967 Model

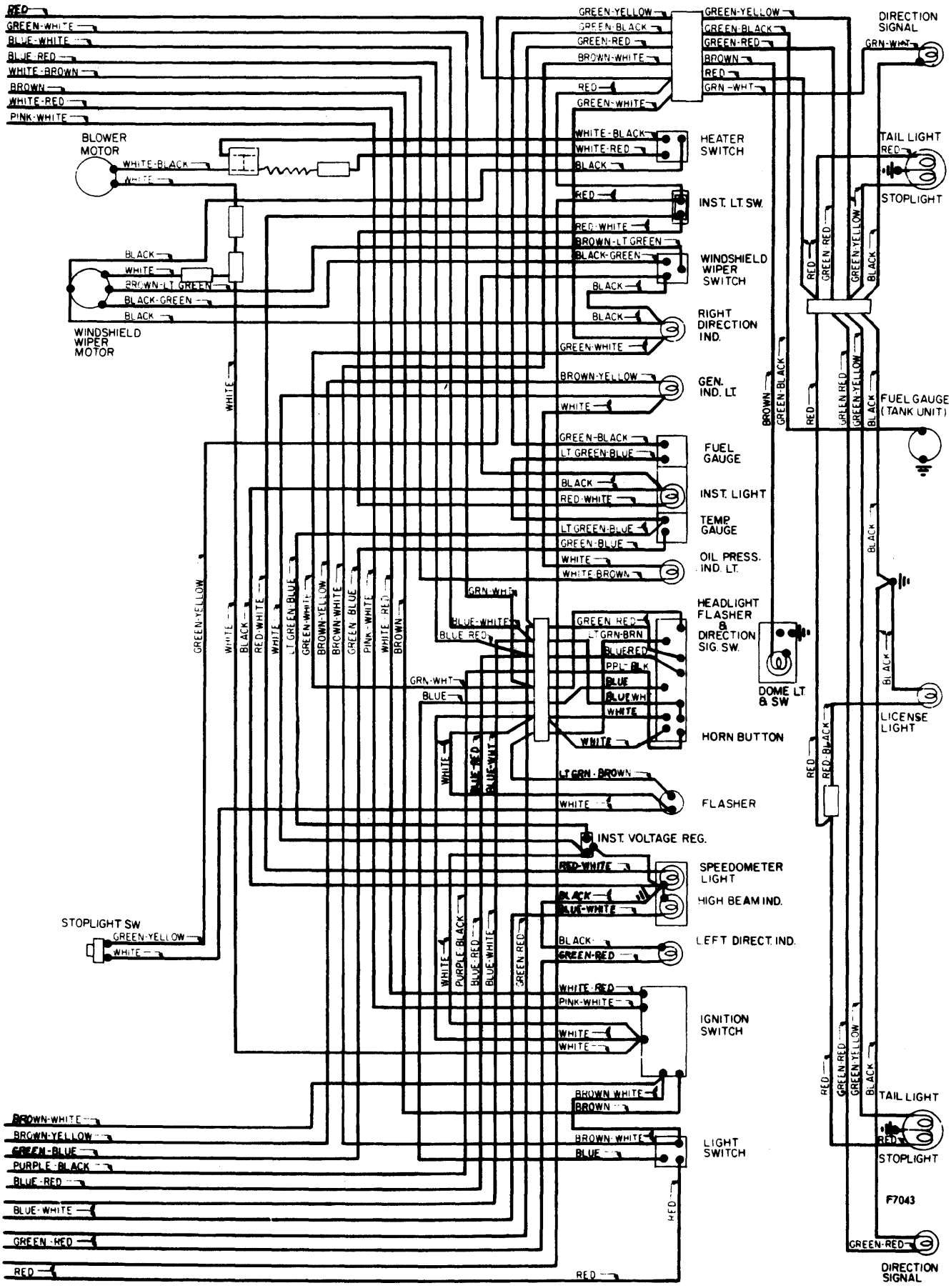

Copyright (c) 2001 Mitchell Repair Information Company