Citroen

1970 DS-21

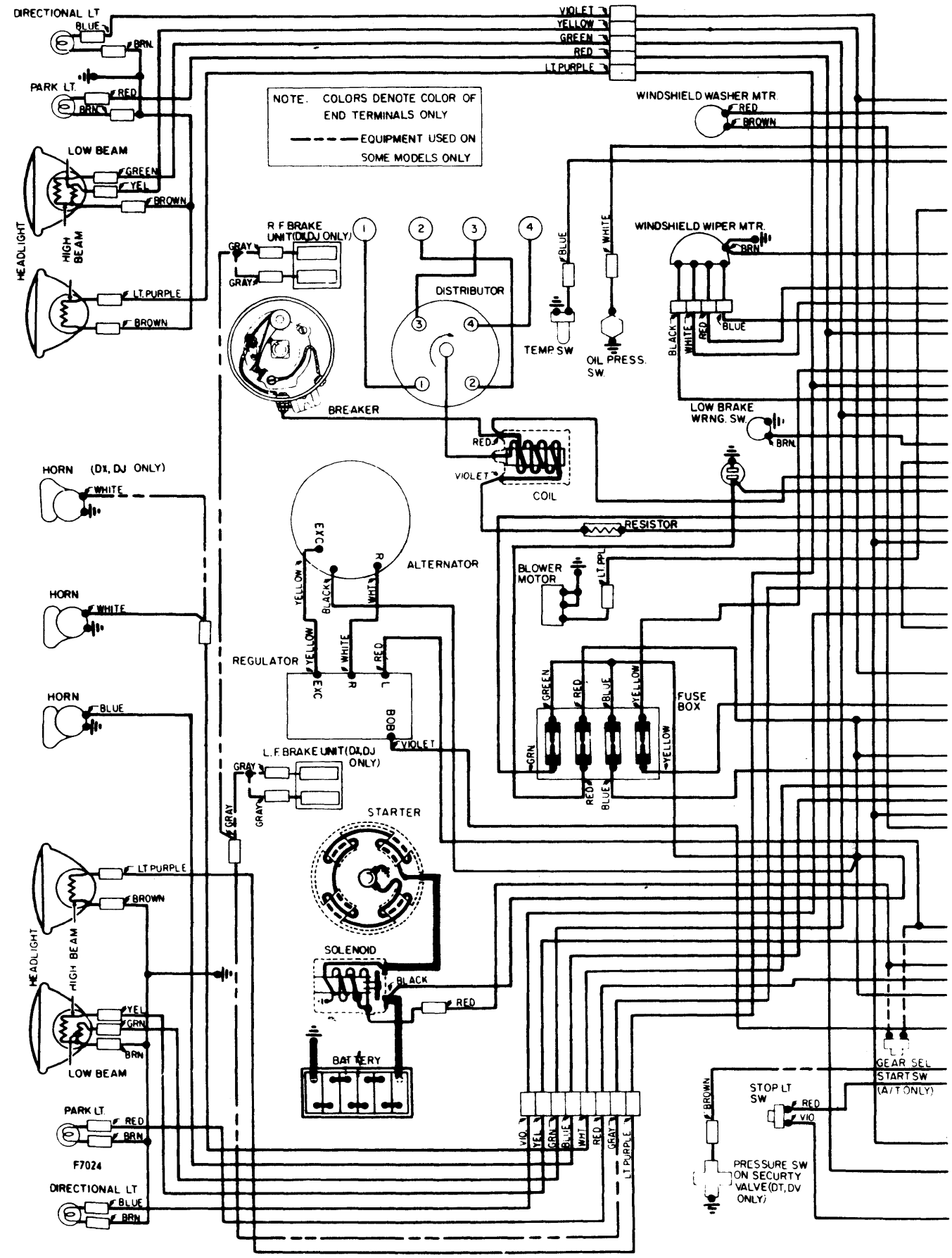

Copyright (c) 2001 Mitchell Repair Information Company

Citroen

1970 DS-21

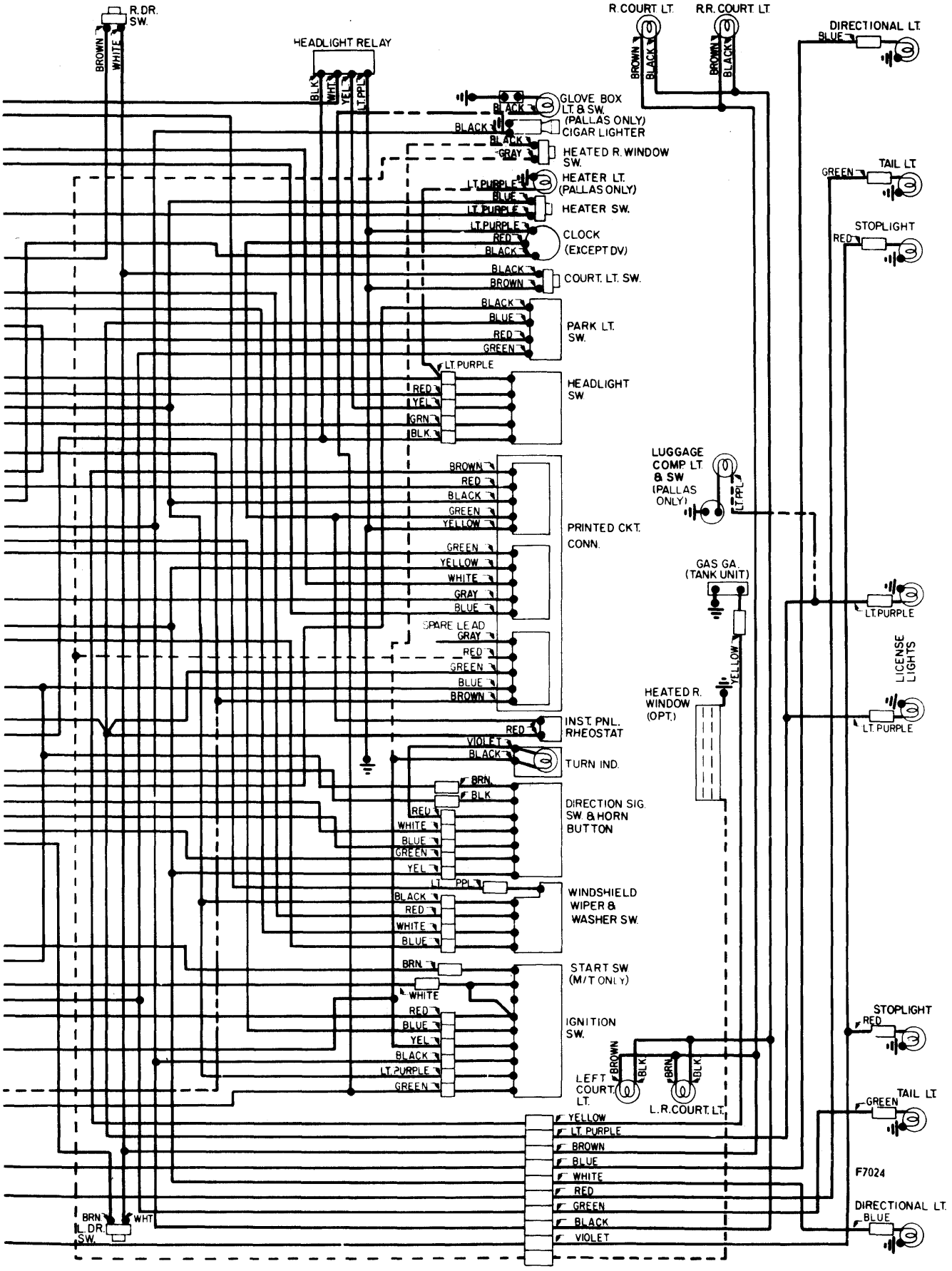

Copyright (c) 2001 Mitchell Repair Information Company