BMW
1600 & 2002

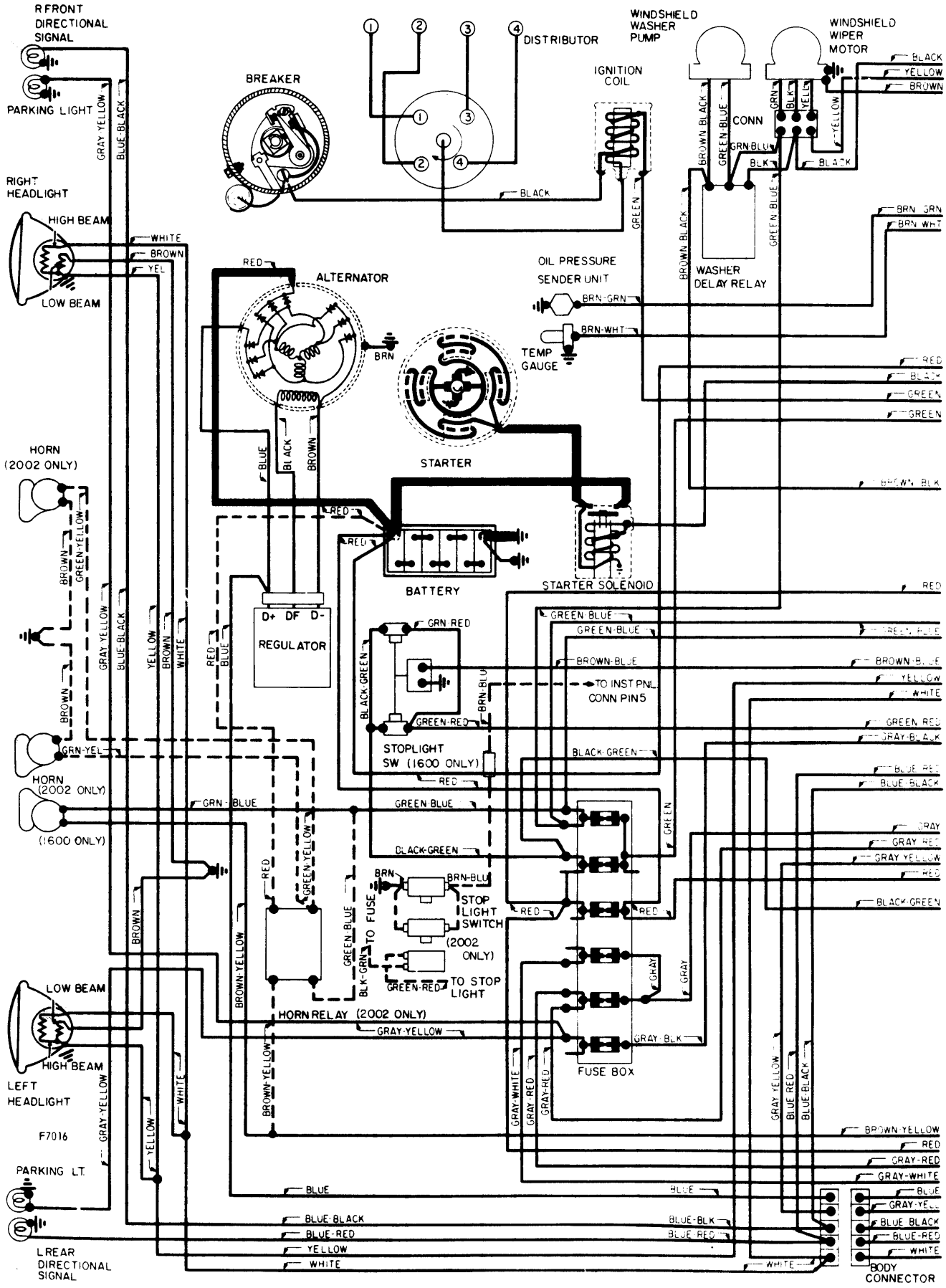

Copyright (c) 2001 Mitchell Repair Information Company

BMW
1600 & 2002

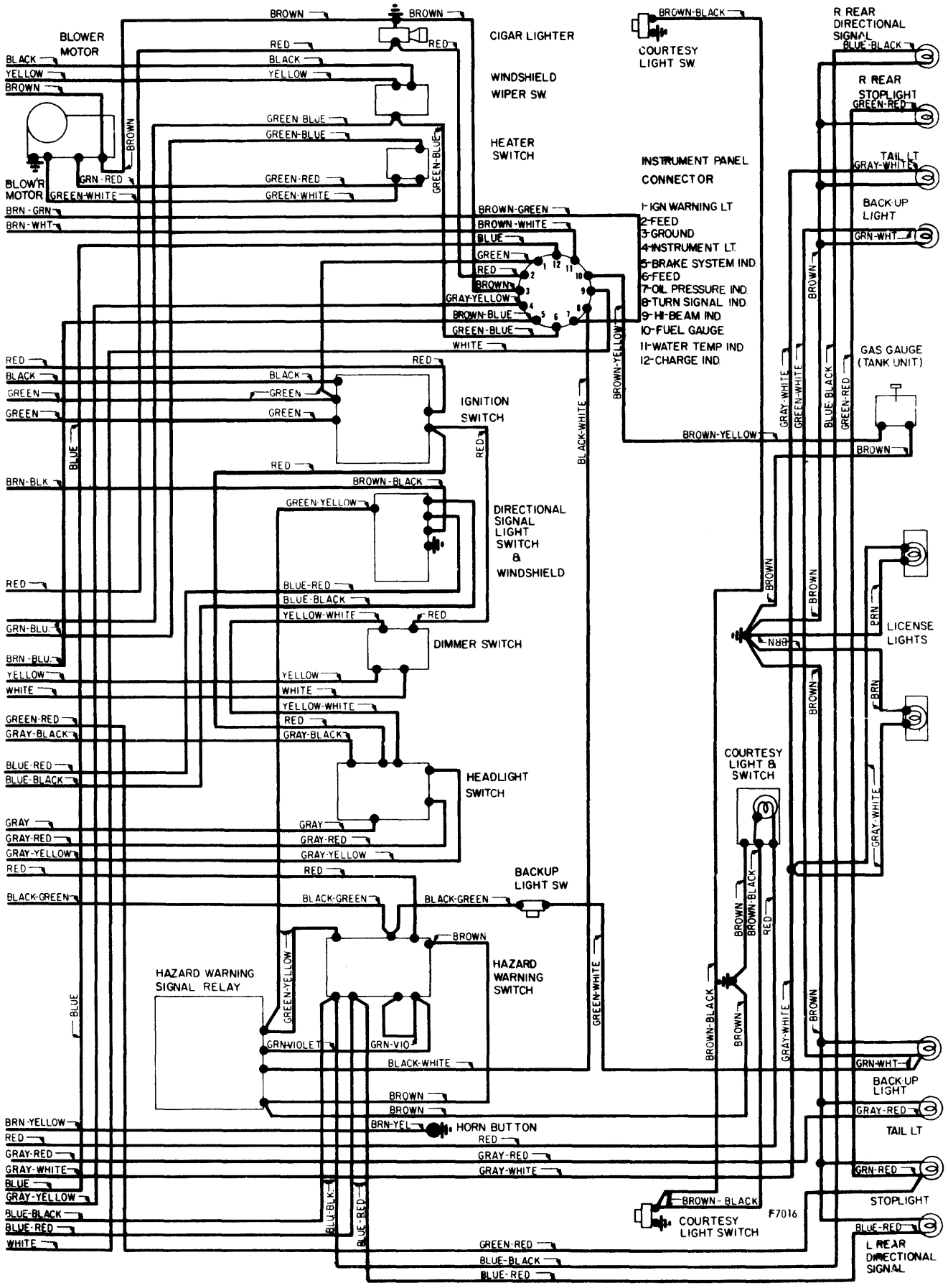

Copyright (c) 2001 Mitchell Repair Information Company