Austin-Healey

Sprite Mk. II

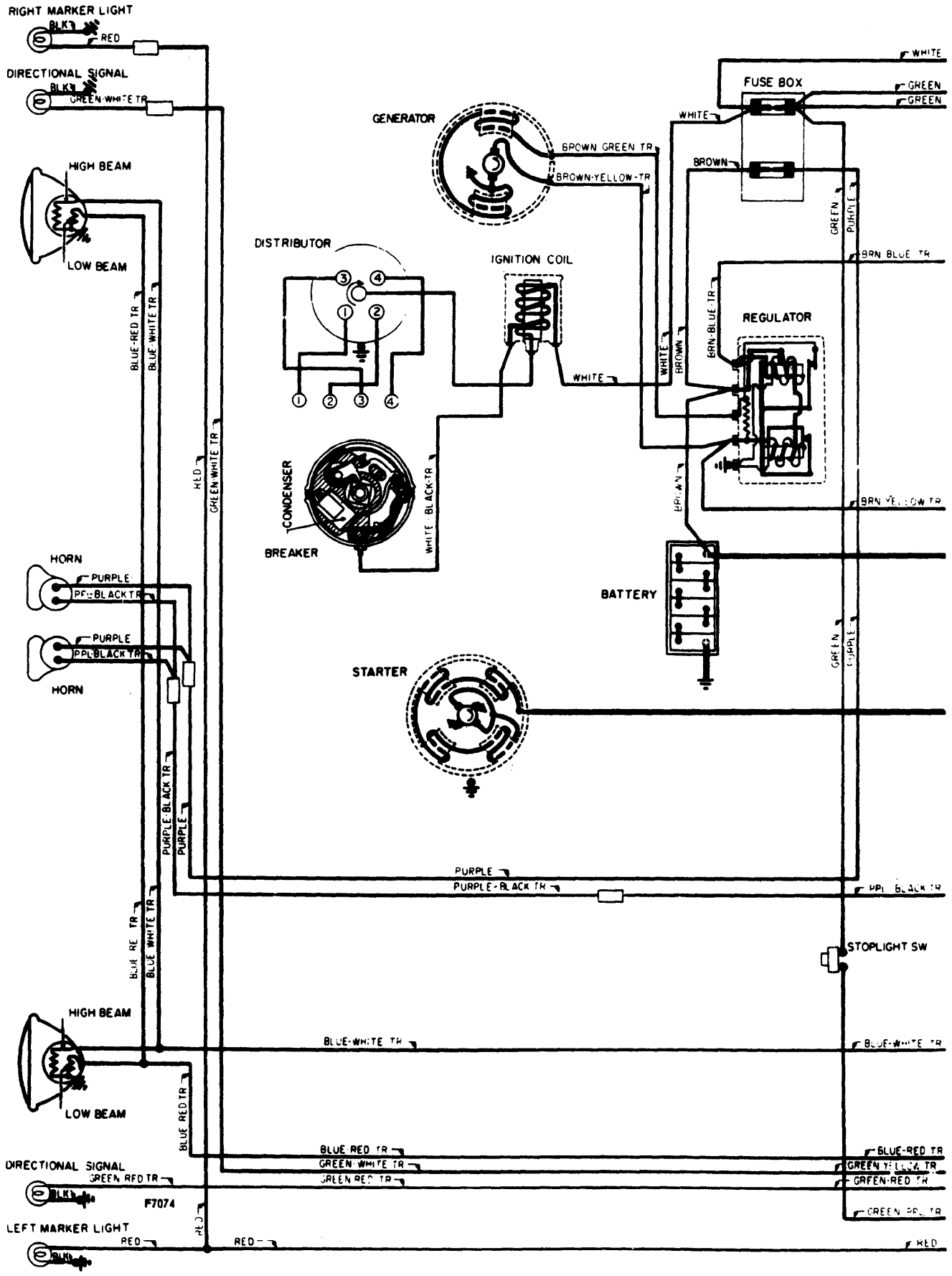

Copyright (c) 2001 Mitchell Repair Information Company

Austin-Healey

Sprite Mk. II

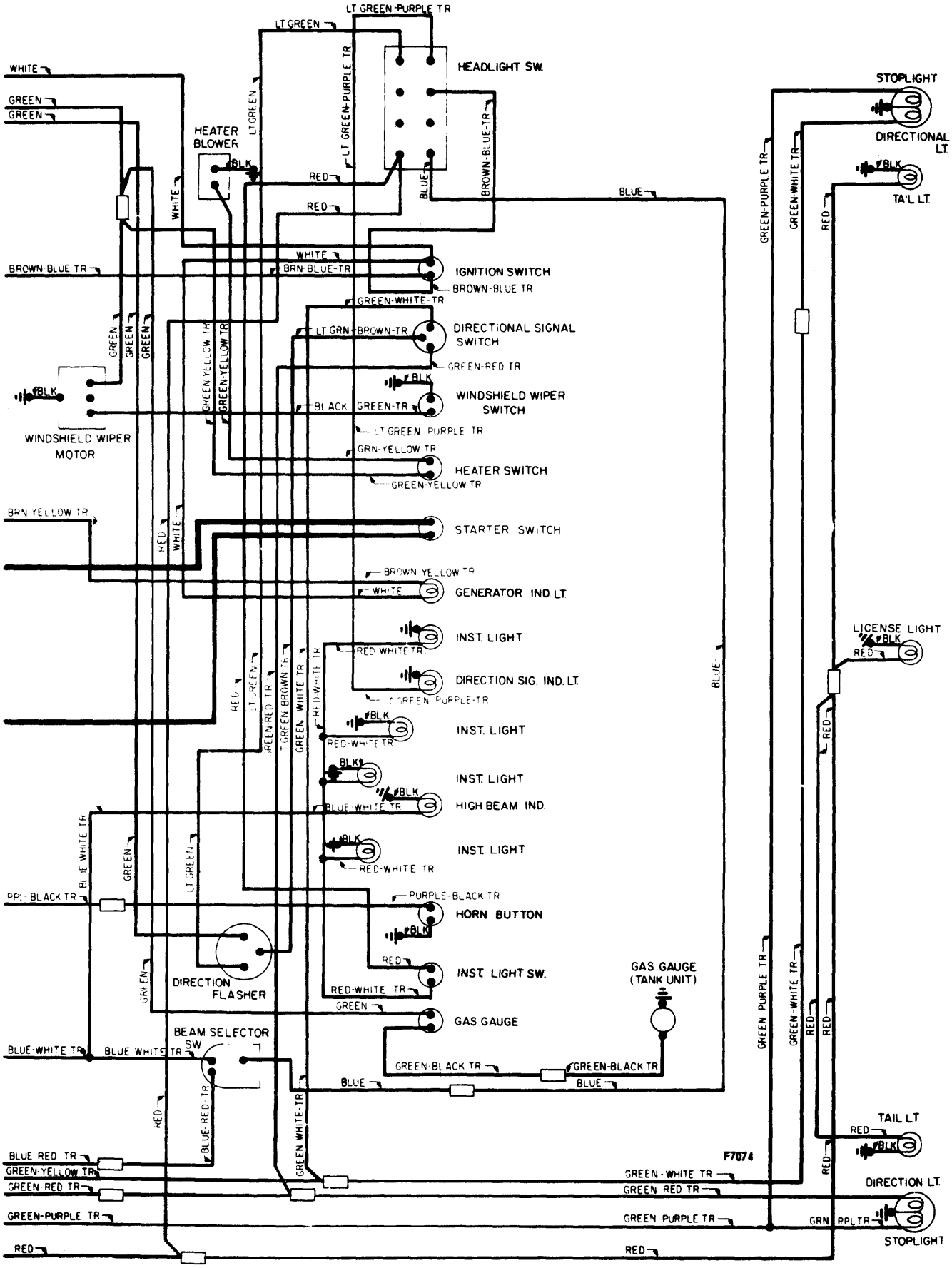

Copyright (c) 2001 Mitchell Repair Information Company