1982 Chrysler Corp.

CHASSIS CABS, PICKUPS & RAMCHARGER

ENGINE COMPARTMENT

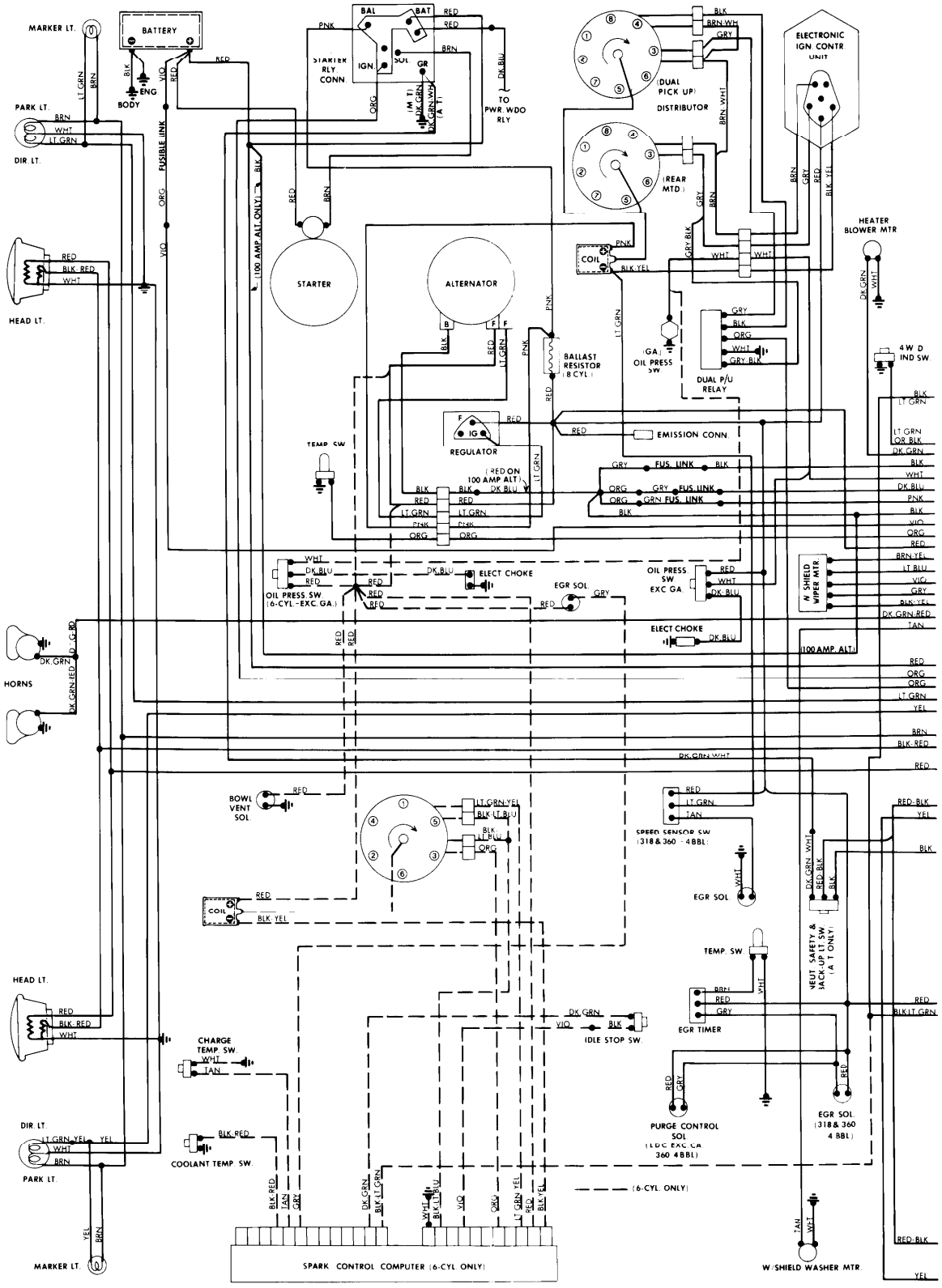

Copyright (c) 2001 Mitchell Repair Information Company

1982 Chrysler Corp.

CHASSIS CABS, PICKUPS & RAMCHARGER (Cont.)

ENGINE COMPARTMENT & FUSE BLOCK

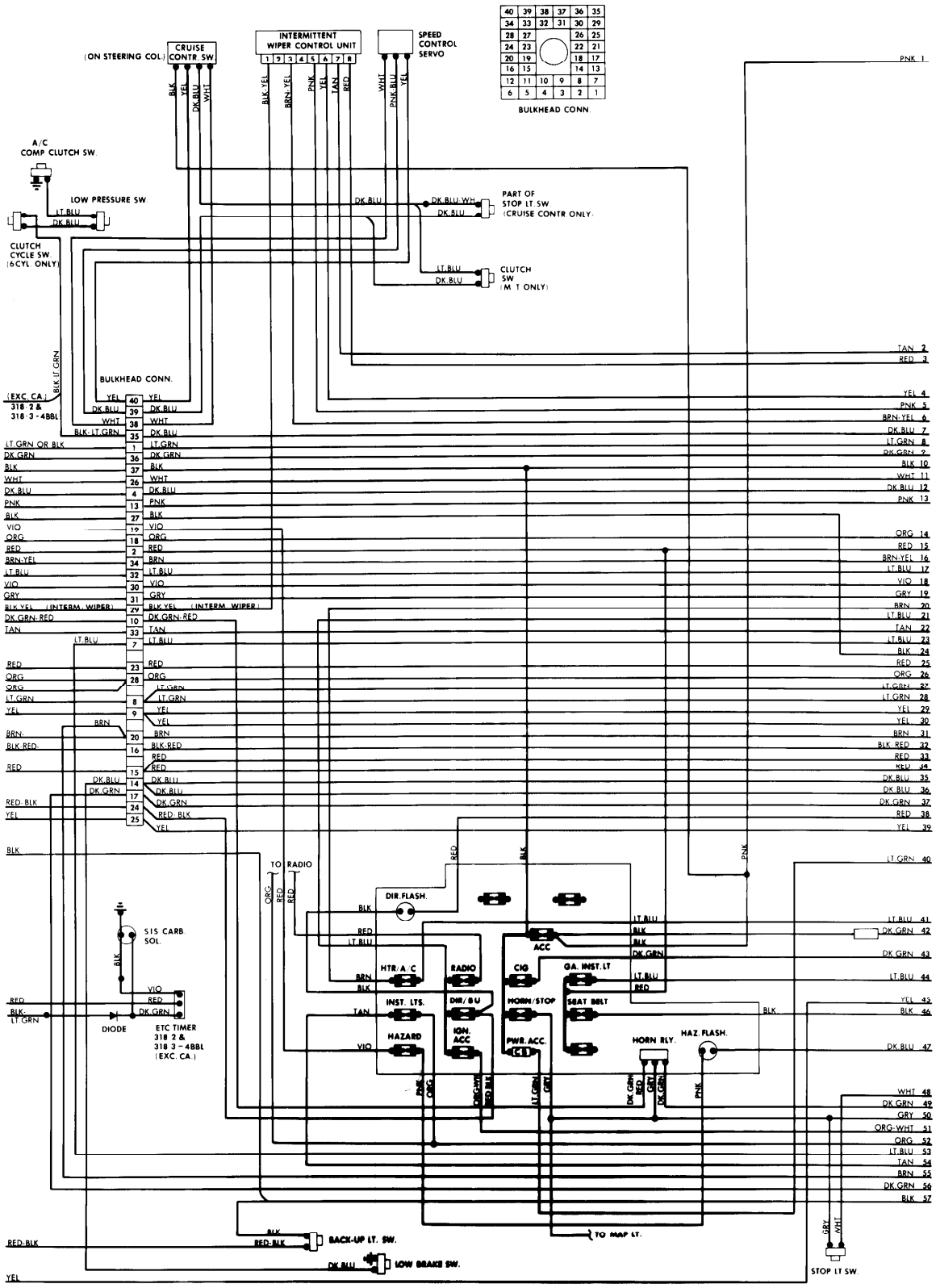

Copyright (c) 2001 Mitchell Repair Information Company

1982 Chrysler Corp.

CHASSIS CABS, PICKUPS & RAMCHARGER (Cont.)

UNDERDASH

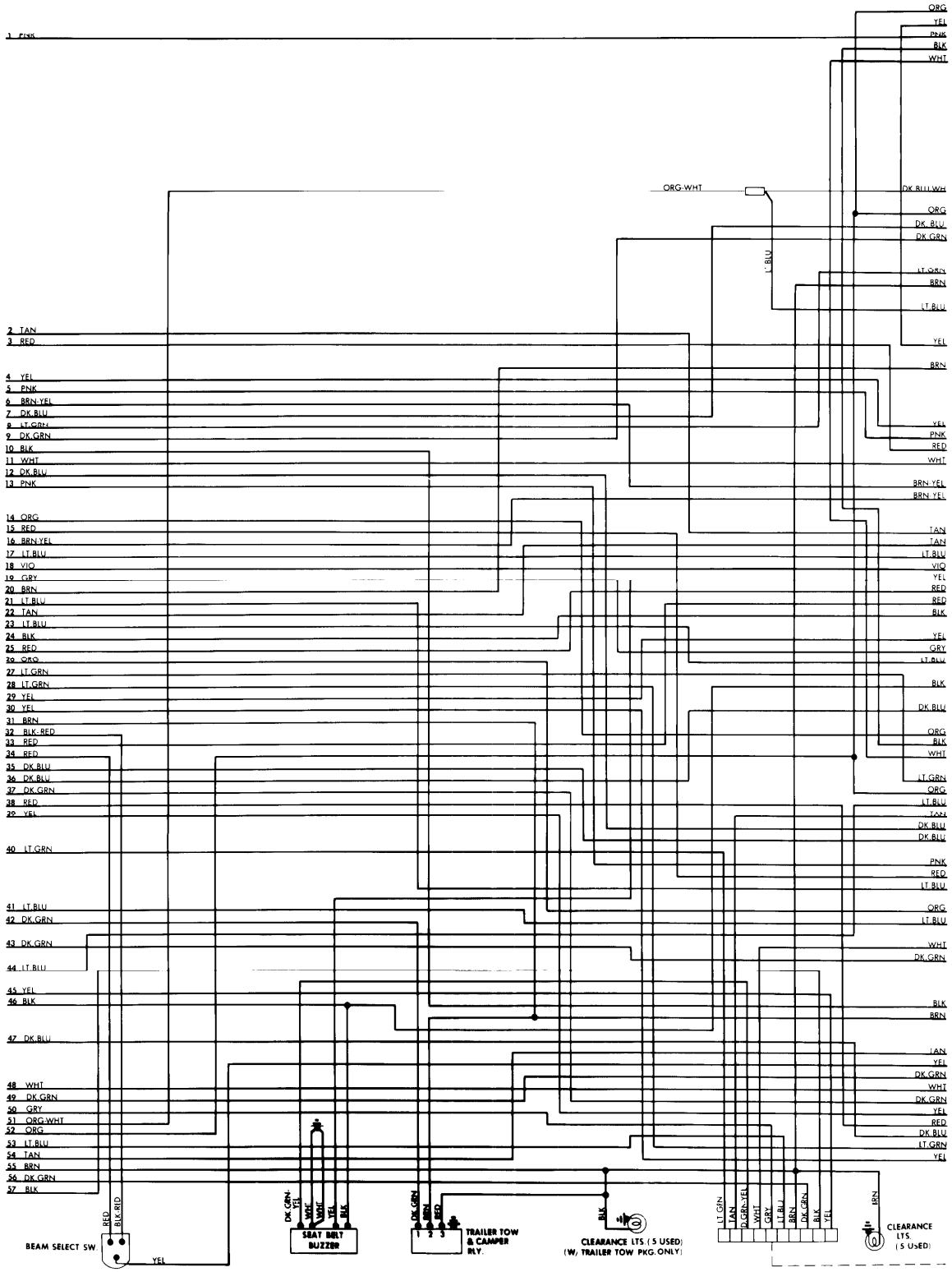

Copyright (c) 2001 Mitchell Repair Information Company

1982 Chrysler Corp.

CHASSIS CABS, PICKUPS & RAMCHARGER (Cont.)

INSTRUMENT PANEL, REAR LIGHTING & ACCESSORIES

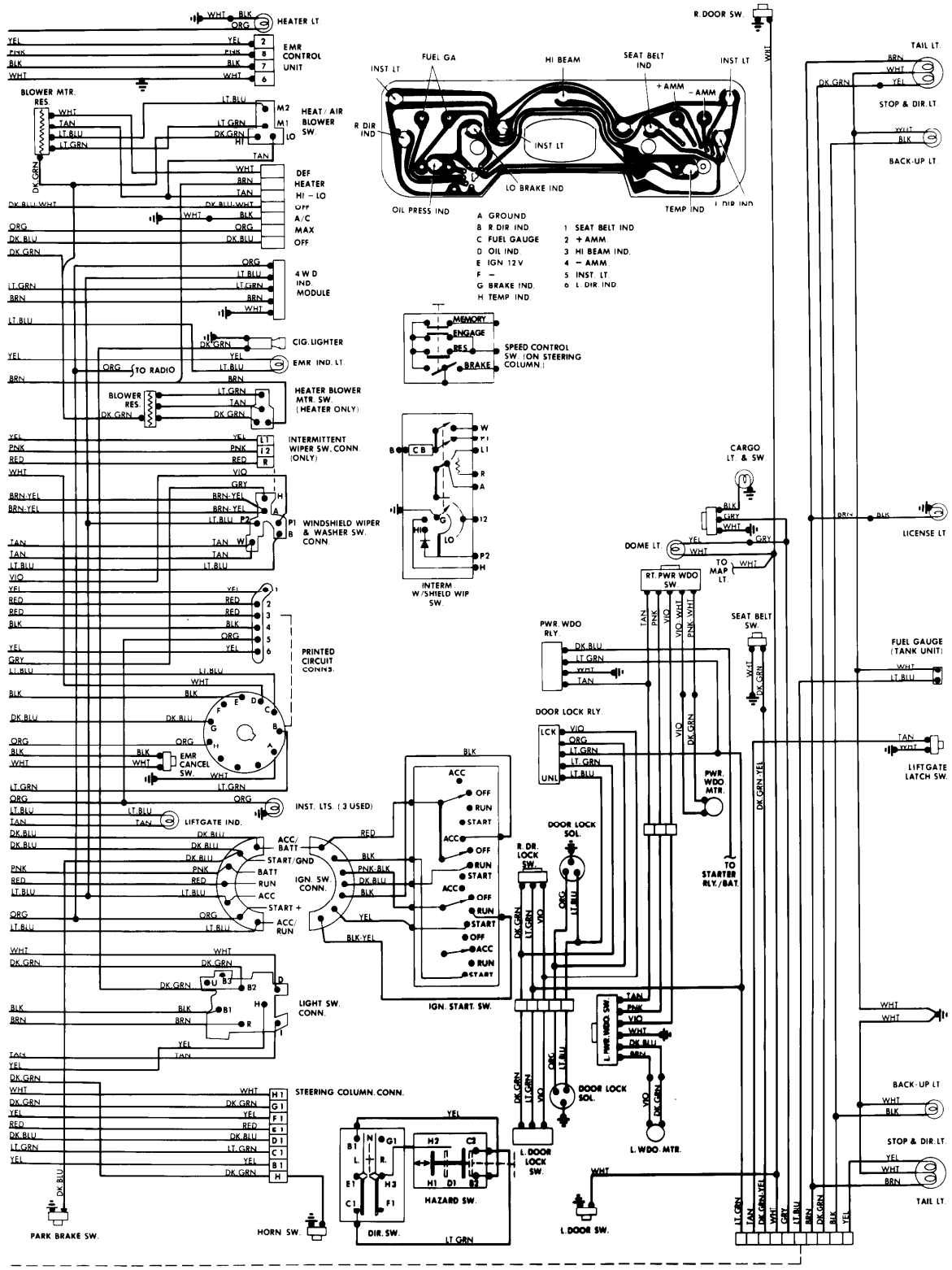

Copyright (c) 2001 Mitchell Repair Information Company