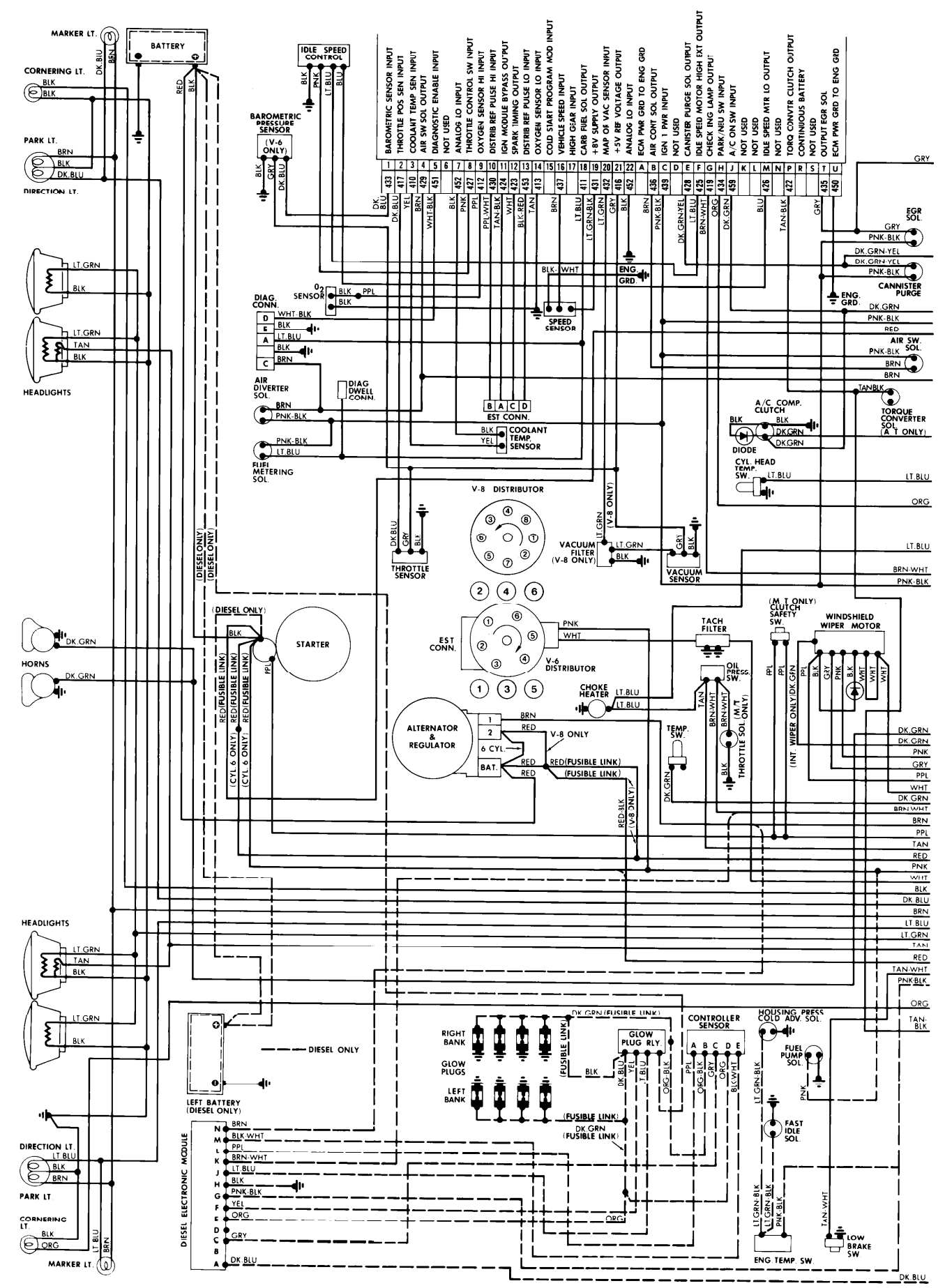

Copyright (c) 2001 Mitchell Repair Information Company

WIRING DIAGRAMS

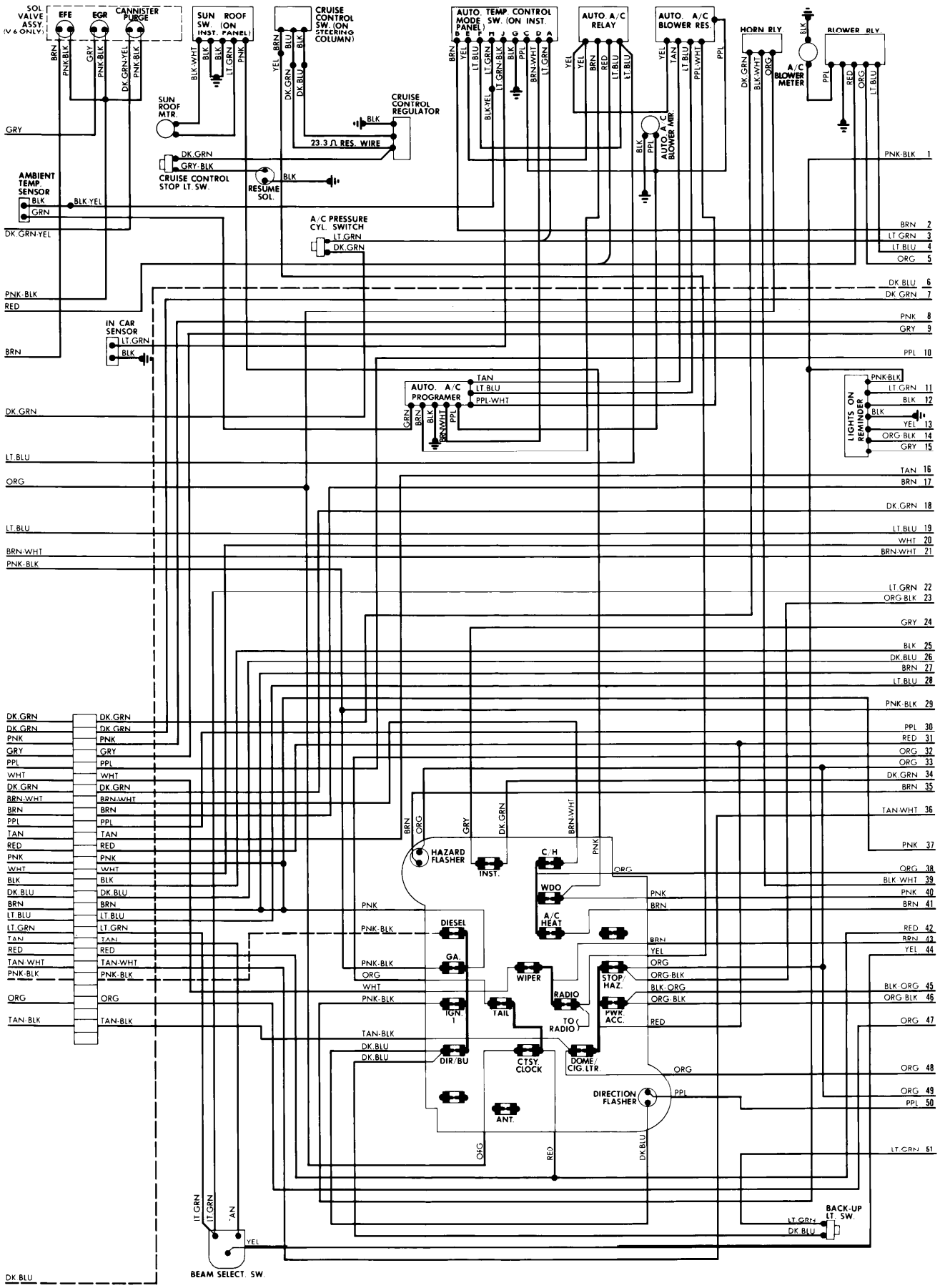

Copyright (c) 2001 Mitchell Repair Information Company

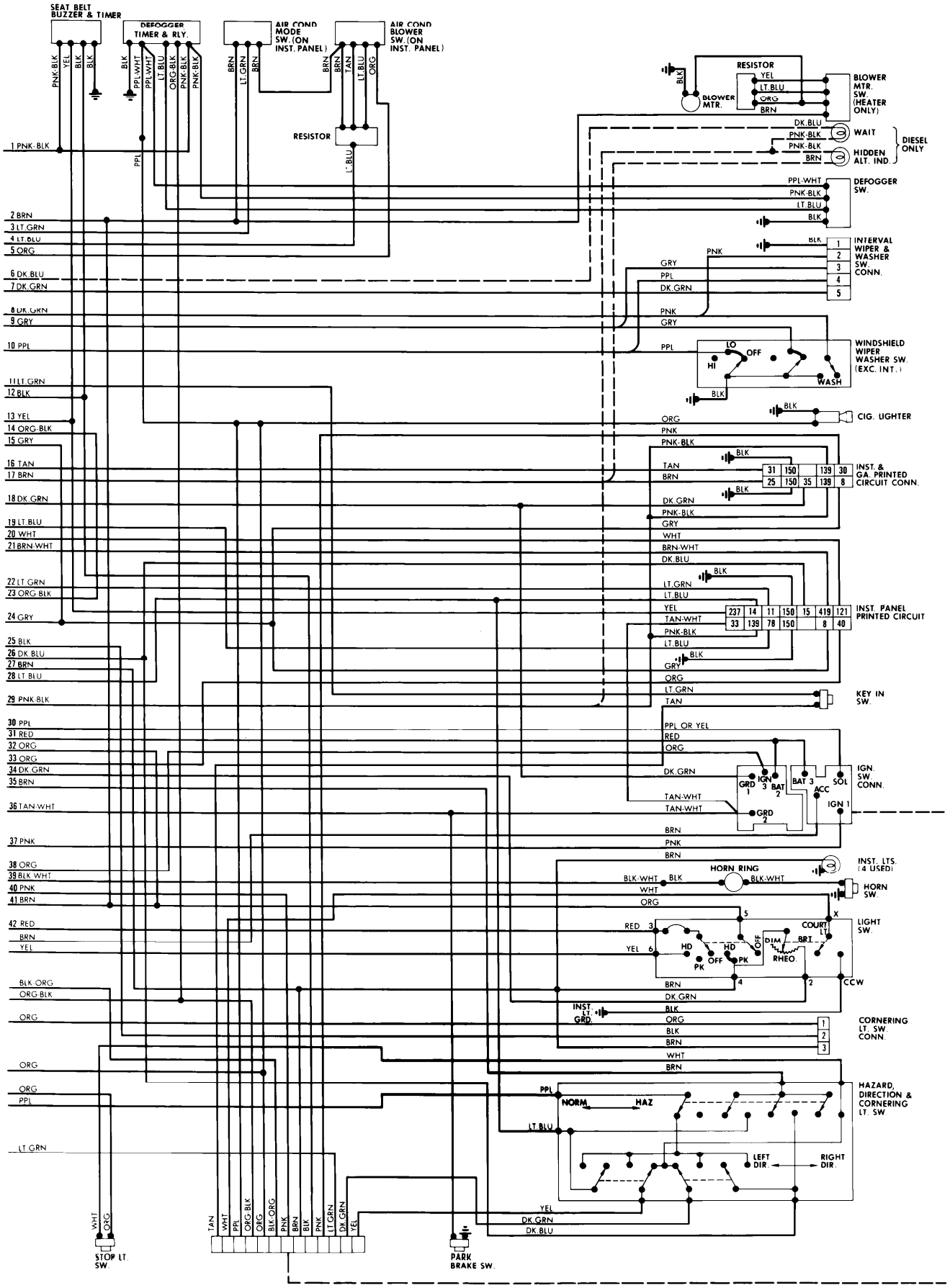

Copyright (c) 2001 Mitchell Repair Information Company

WIRING DIAGRAMS

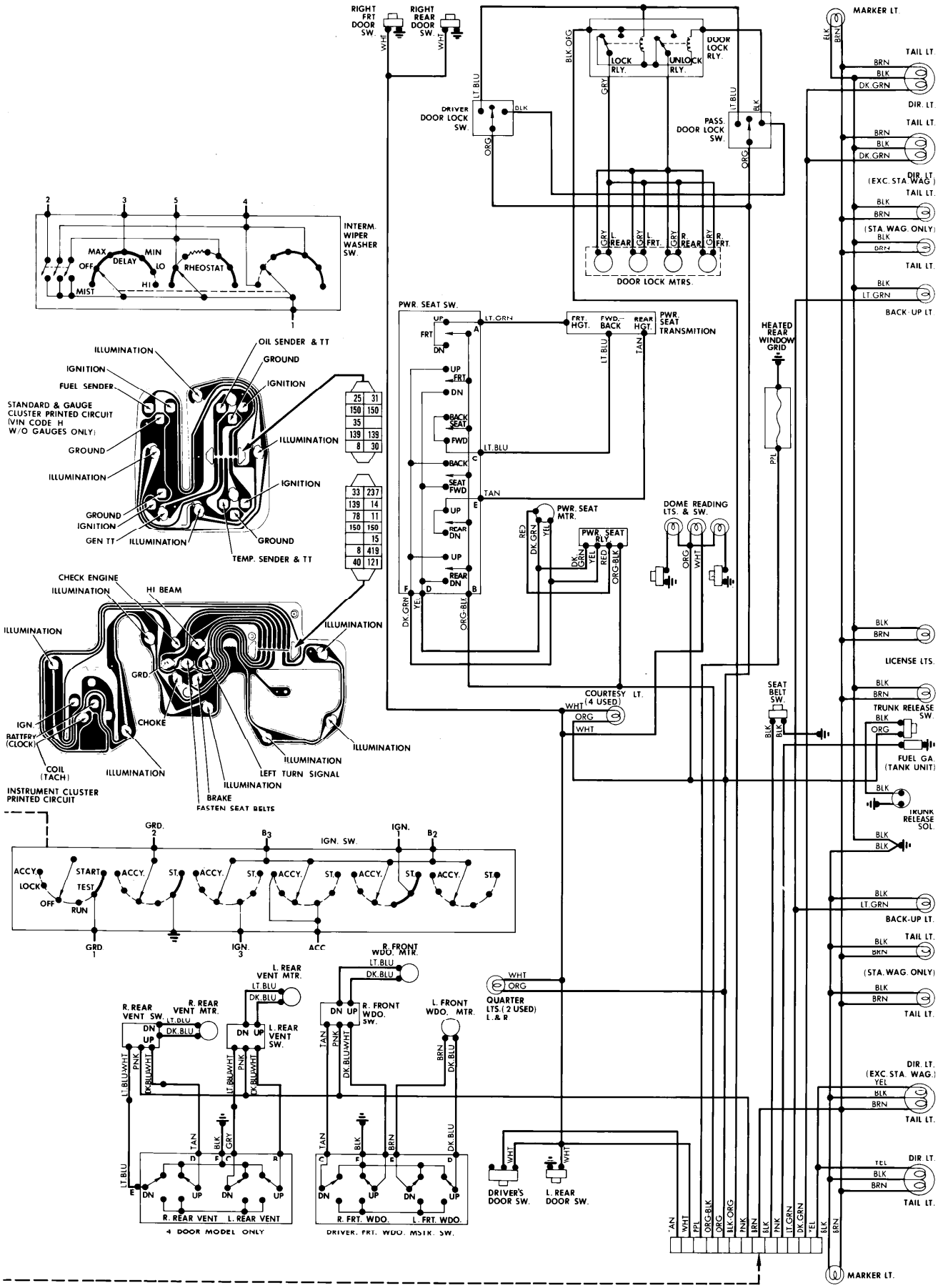

Copyright (c) 2001 Mitchell Repair Information Company