# 1981 General Motors



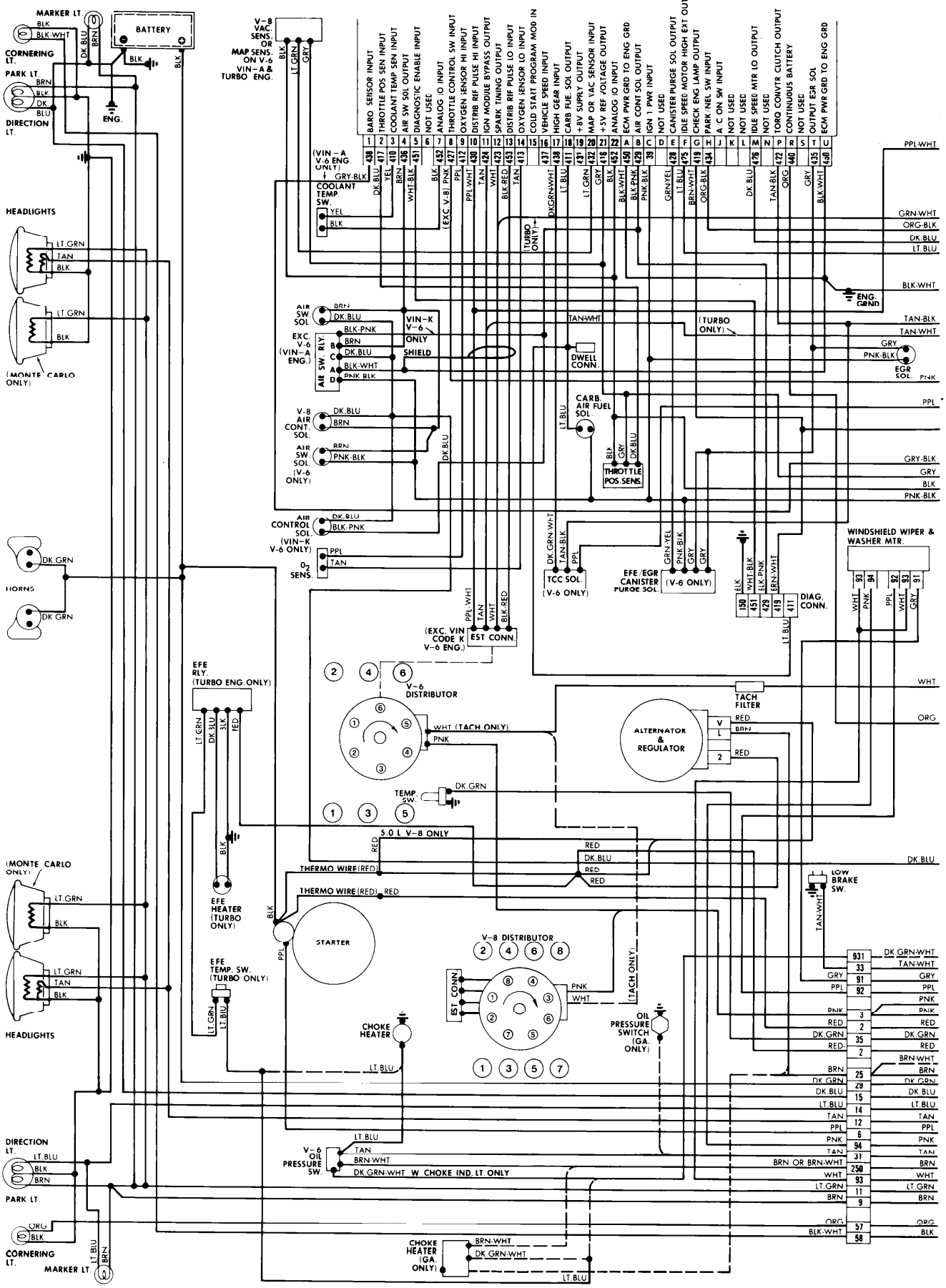


Copyright (c) 2001 Mitchell Repair Information Company

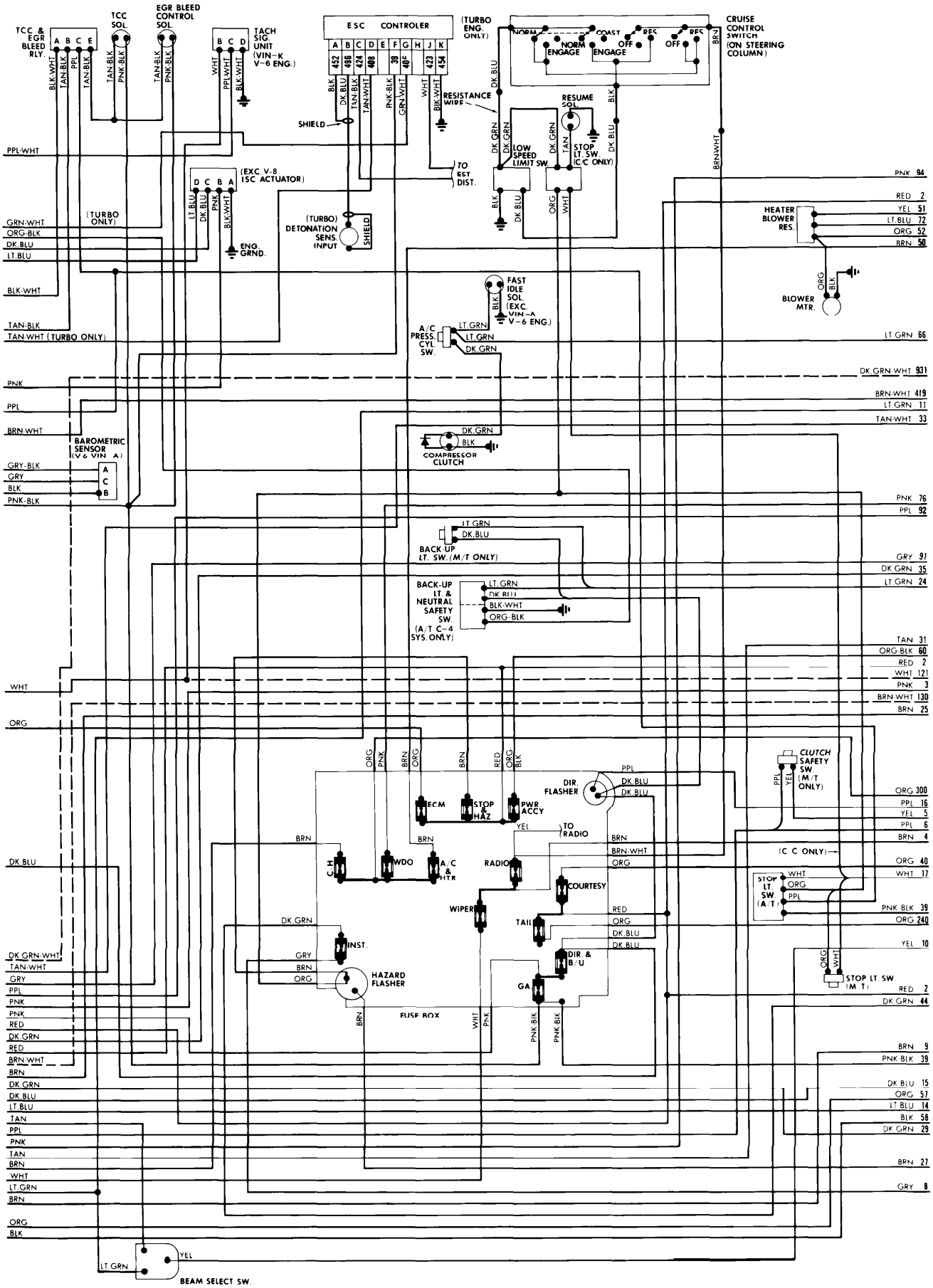


Copyright (c) 2001 Mitchell Repair Information Company

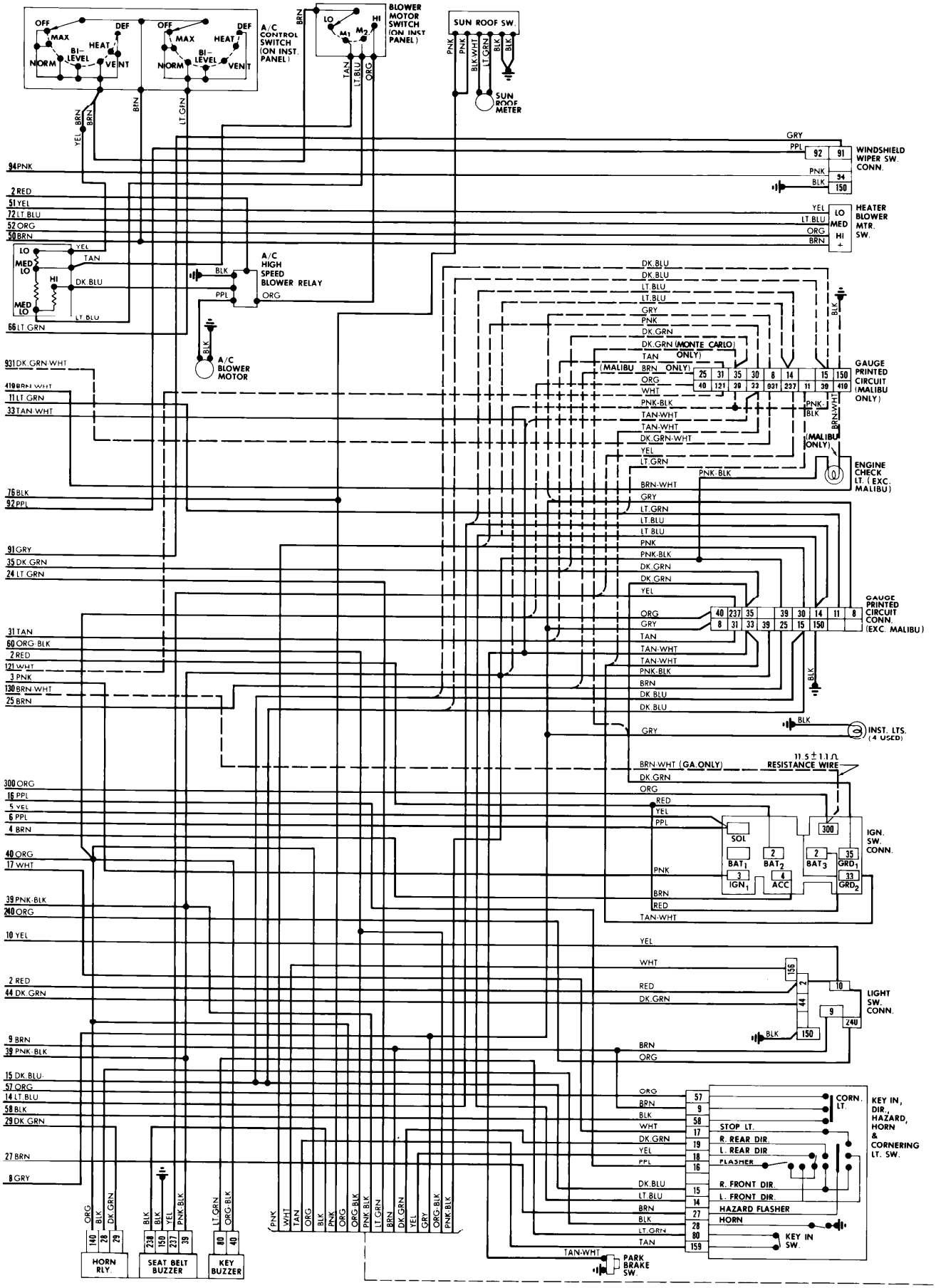


Copyright (c) 2001 Mitchell Repair Information Company

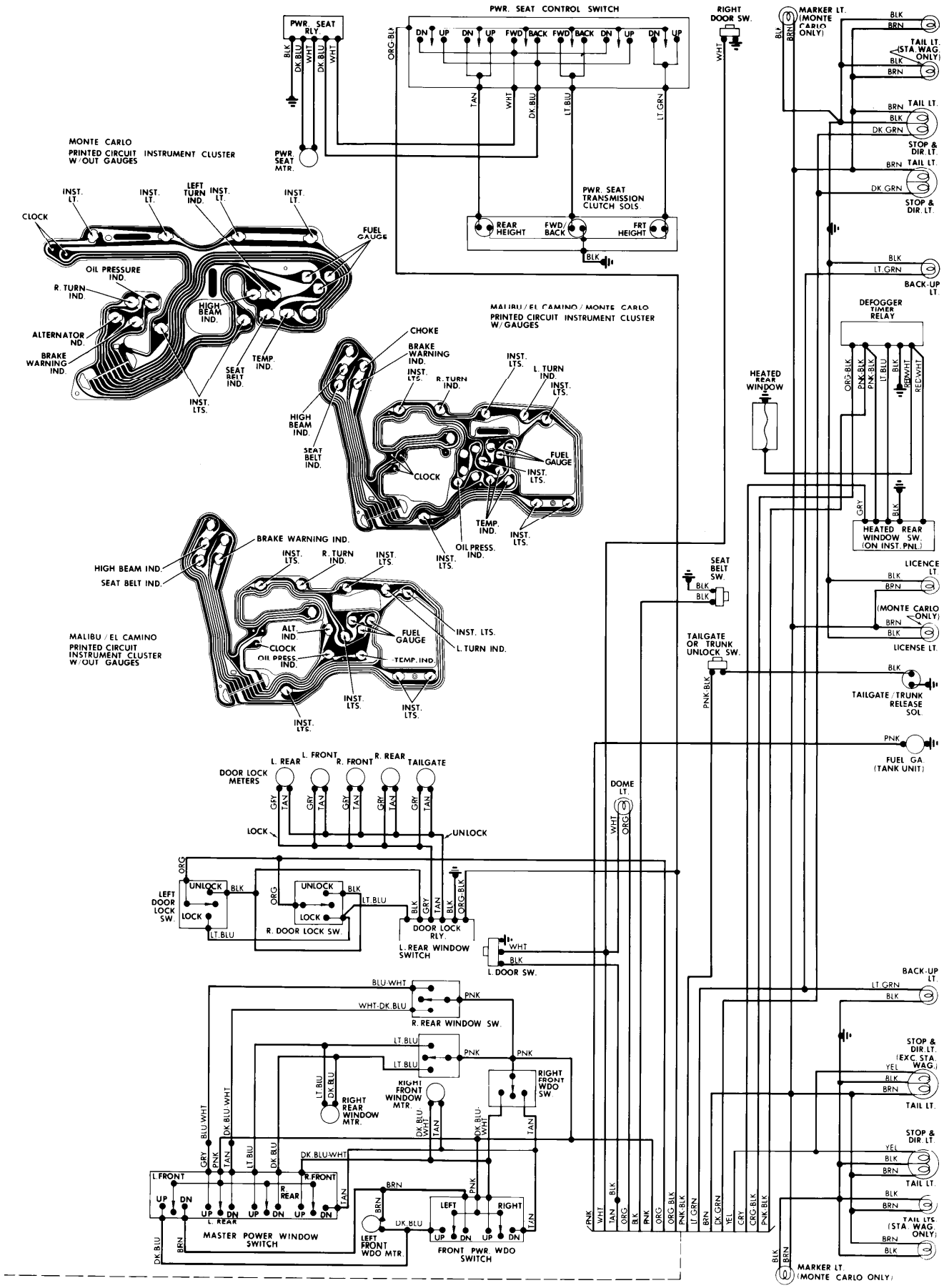


Copyright (c) 2001 Mitchell Repair Information Company