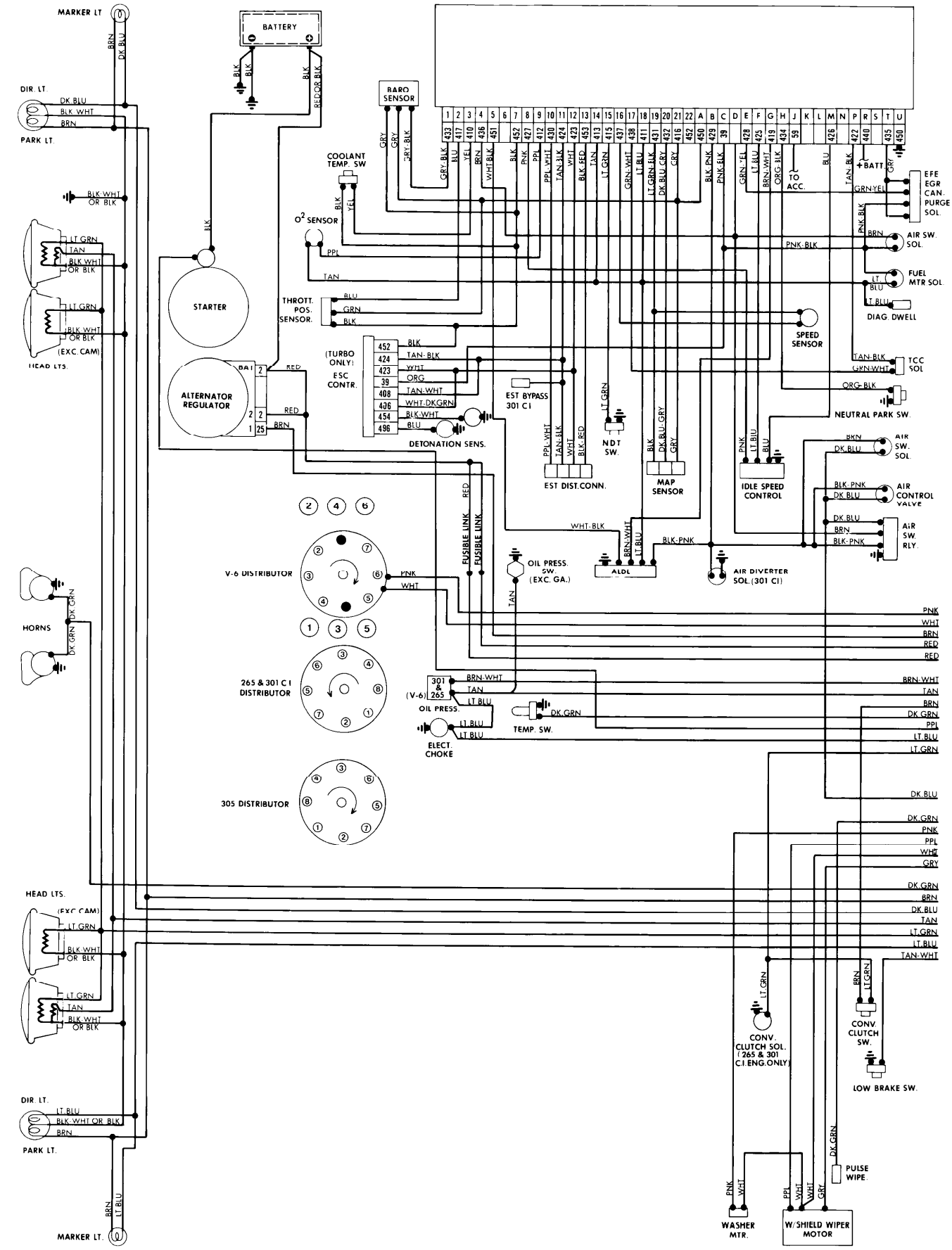

Copyright (c) 2001 Mitchell Repair Information Company

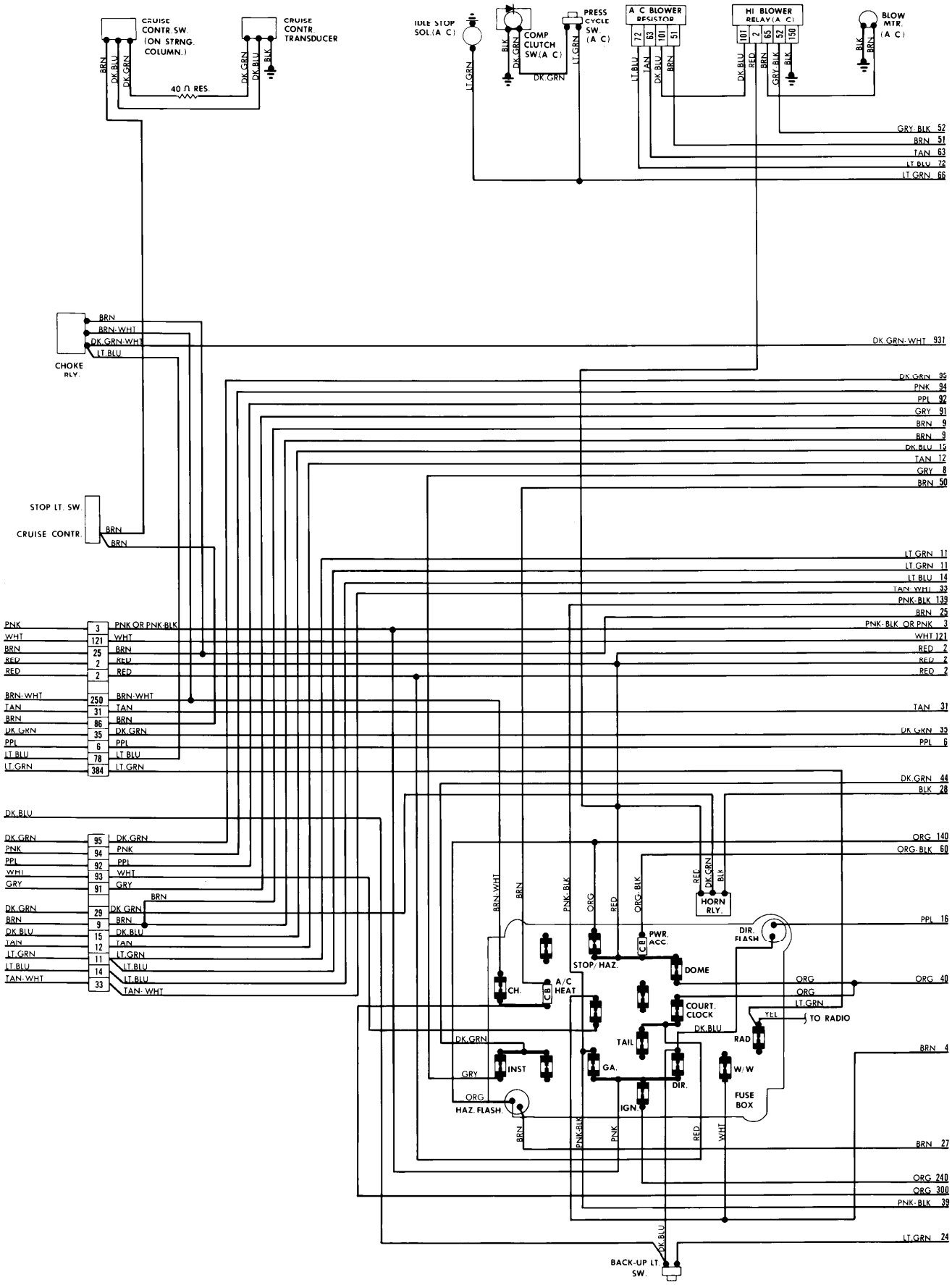

Copyright (c) 2001 Mitchell Repair Information Company

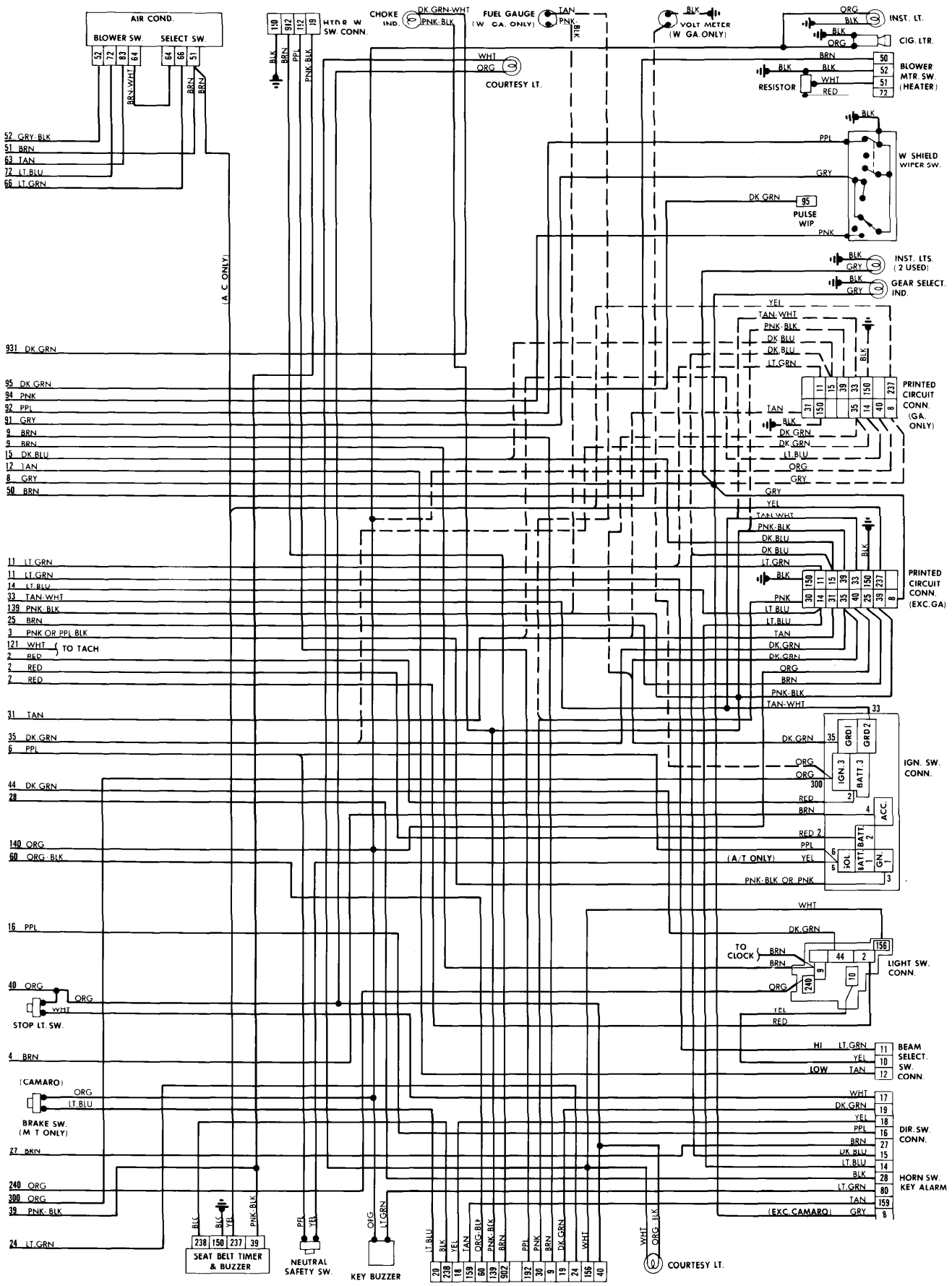

Copyright (c) 2001 Mitchell Repair Information Company

PRINTED CIRCUIT
WITHOUT RALLY GAGES

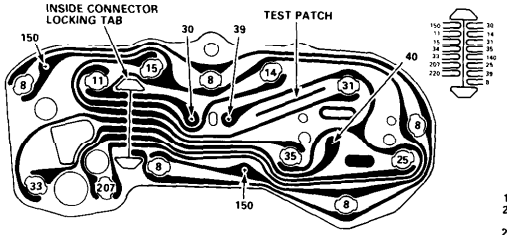

LEGEND OF CONNECTOR PADS
8 — ILLUMINATION
11 — HIGH BEAM INDICATOR
14 — LEFT TURN SIGNAL INDICATOR
15 — RIGHT TURN SIGNAL INDICATOR
25 — GENERATOR TELLTALE
30 — FUEL GA SENDER
31 — OIL TELLTALE
33 — BRK WARNING INDICATOR
36 — TEMP TELLTALE
39 — IGNITION
40 — CLOCK
150 — GROUND
207 — STARTER INTERLOCK GROUND
220 — STARTER INTERLOCK TELLTALE

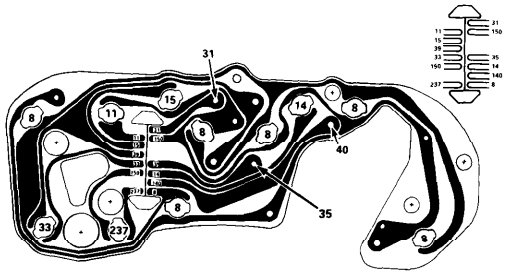

WITH RALLY GAGES — CLOCK AND TACH

LEGEND OF CONNECTOR PADS
237 — FASTEN SEAT BELTS
150 — FASTEN SEAT BELTS
33 — BRAKE WARNING INDICATOR
39 — IGNITION
15 — 7 RIGHT TURN SIGNAL
11 — HI BEAM
31 — OIL PRESSURE GAGE SENDER
150 — GROUND
10 — TEMPERATURE GAGE SENDER
14 — LEFT TURN SIGNAL
40 — CLOCK
8 — ILLUMINATION

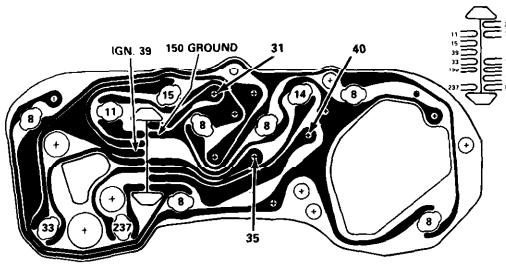

WITH RALLY GAGES & RALLY CLOCK

LEGEND OF CONNECTOR PADS
237 — FASTEN SEAT BELTS
150 — FASTEN SEAT BELTS
33 — BRAKE WARNING INDICATOR
39 — IGNITION
15 — RIGHT TURN SIGNAL
11 — HI-BEAM
31 — OIL PRESSURE GAGE SENDER
150 — GROUND
35 — TEMPERATURE GAGE SENDER
14 — LEFT TURN SIGNAL
40 — CLOCK
8 — ILLUMINATION

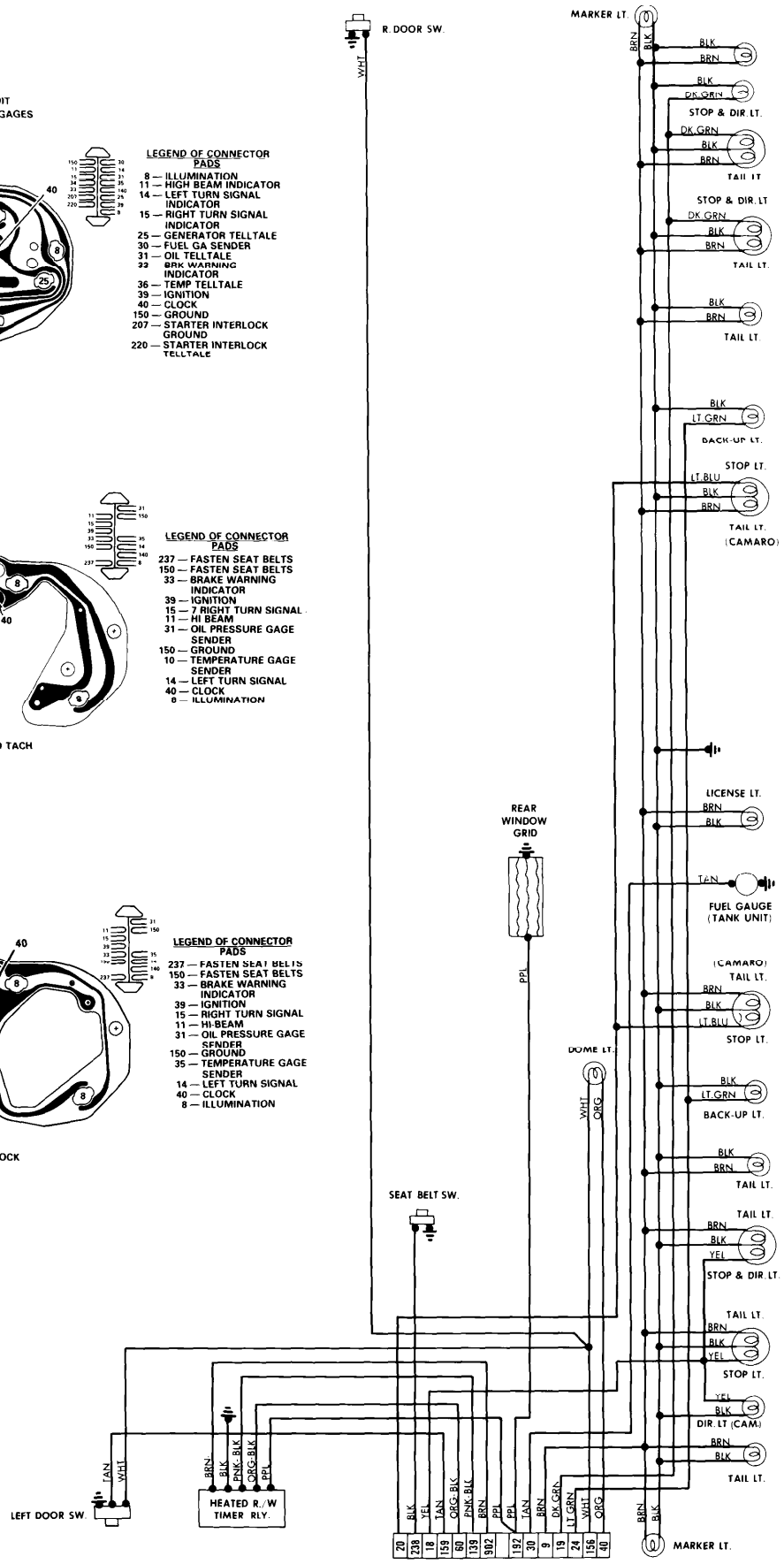

Copyright (c) 2001 Mitchell Repair Information Company