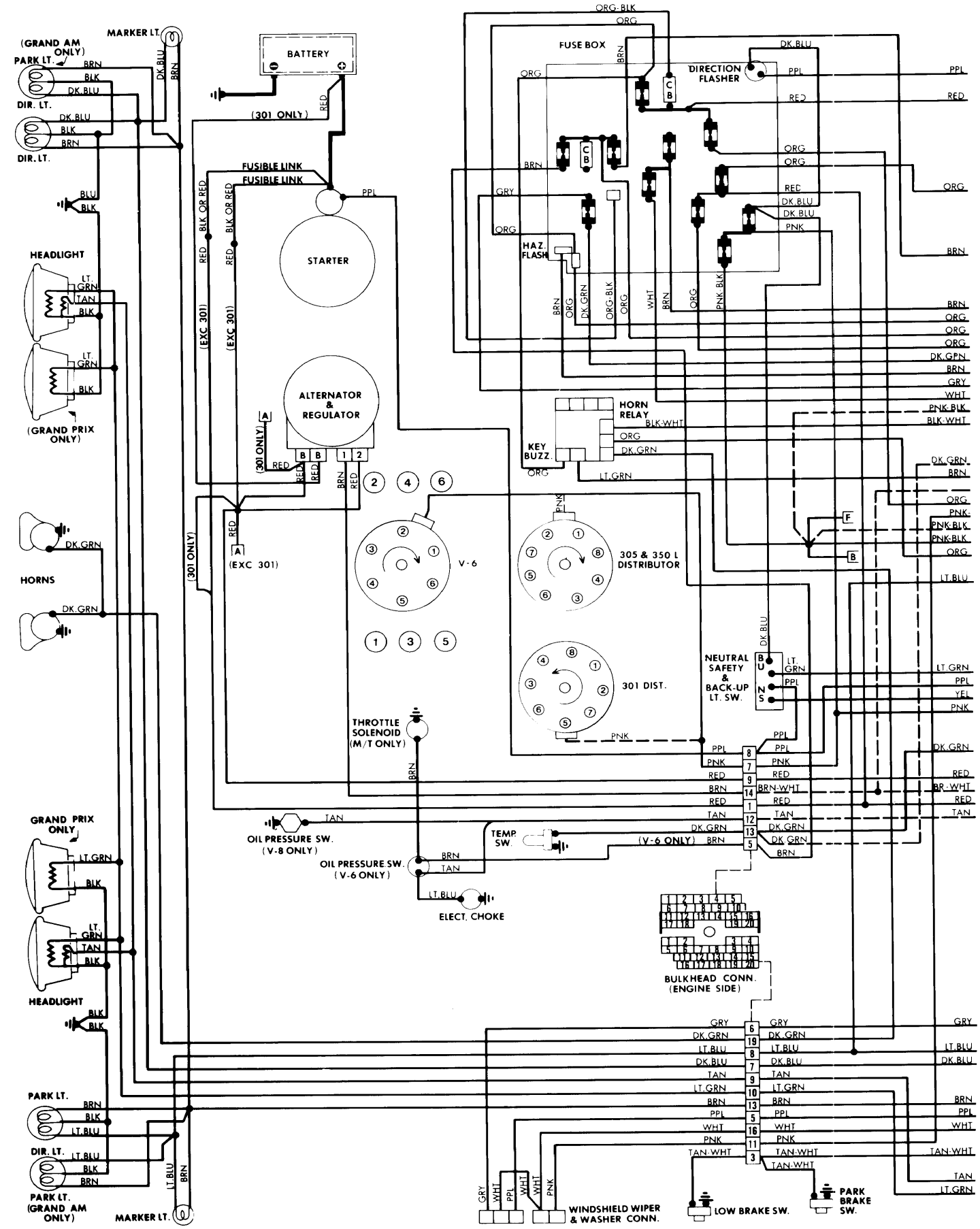
MARKER LT.
(GRAND AM ONLY)
PARK LT.
DIR. LT.
DIR. LT.
HEADLIGHT
(GRAND PRIX ONLY)
HORNS
GRAND PRIX ONLY
HEADLIGHT
PARK LT.
DIR. LT.
PARK LT. (GRAND AM ONLY)
MARKER LT.
BATTERY
(301 ONLY)
FUSIBLE LINK
FUSIBLE LINK
STARTER
ALTERNATOR & REGULATOR
(301 ONLY)
(EXC 301)
(EXC 301)
(301 ONLY)
(EXC 301)
V-6
305 & 350 L DISTRIBUTOR
301 DIST.
THROTTLE SOLENOID (M/T ONLY)
OIL PRESSURE SW. (V-8 ONLY)
OIL PRESSURE SW. (V-6 ONLY)
TEMP SW.
(V-6 ONLY)
ELECT. CHOKE
FUSE BOX
DIRECTION FLASHER
HAZ. FLASH
HORN RELAY
KEY BUZZ.
NEUTRAL SAFETY & BACK-UP LT. SW.
BULKHEAD CONN. (ENGINE SIDE)
WINDSHIELD WIPER & WASHER CONN.
LOW BRAKE SW.
PARK BRAKE SW.

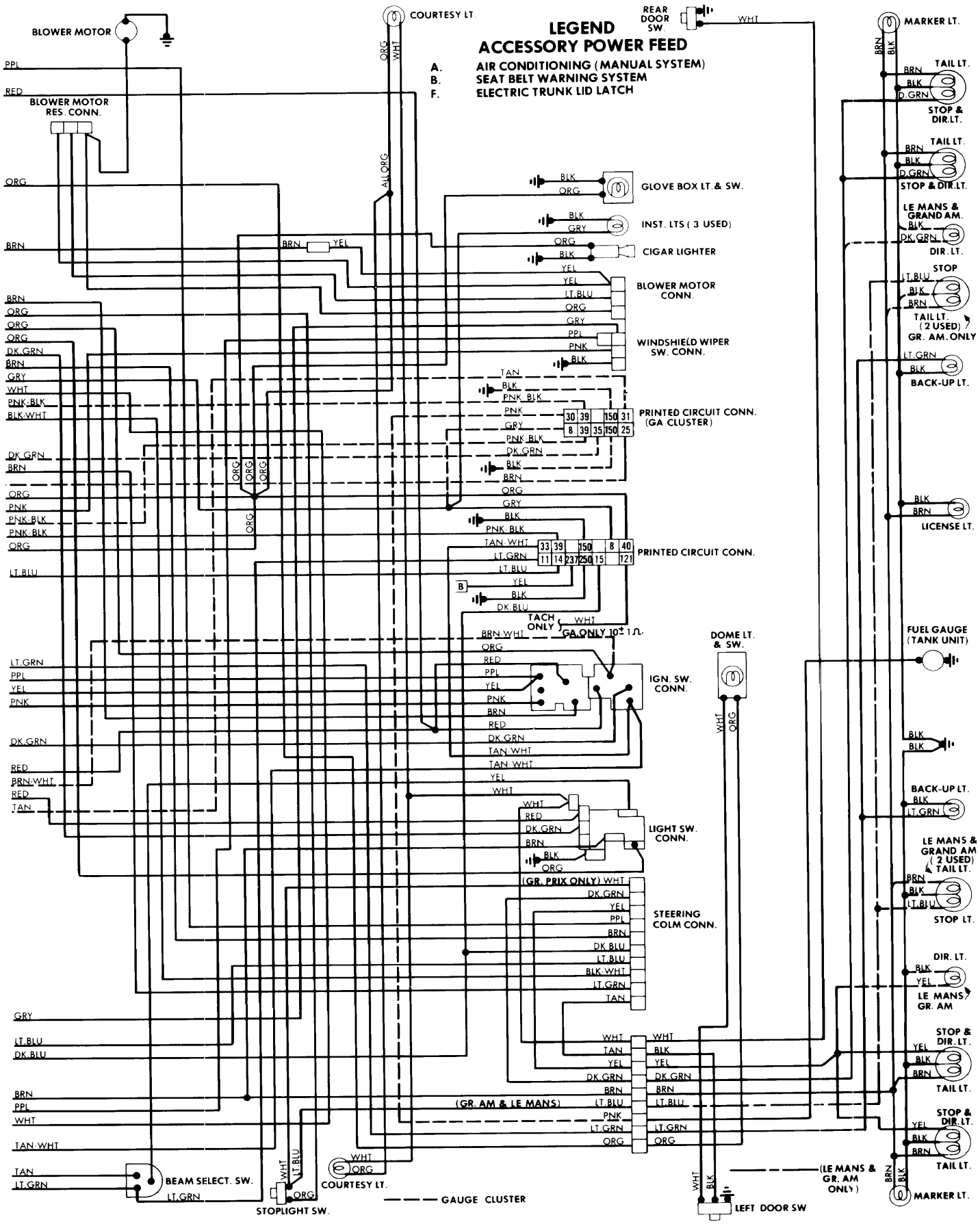
LEGEND
ACCESSORY POWER FEED
A. AIR CONDITIONING (MANUAL SYSTEM)
B. SEAT BELT WARNING SYSTEM
F. ELECTRIC TRUNK LID LATCH
BLOWER MOTOR
BLOWER MOTOR RES. CONN.
COURTESY LT.
REAR DOOR SW.
MARKER LT.
TAIL LT.
STOP & DIR. LT.
LE MANS & GRAND AM.
DIR. LT.
STOP
TAIL LT. (2 USED) GR. AM. ONLY
BACK-UP LT.
LICENSE LT.
FUEL GAUGE (TANK UNIT)
LE MANS & GRAND AM (2 USED) TAIL LT.
STOP LT.
DIR. LT.
LE MANS, GR. AM
GLOVE BOX LT. & SW.
INST. LTS (3 USED)
CIGAR LIGHTER
BLOWER MOTOR CONN.
WINDSHIELD WIPER SW. CONN.
PRINTED CIRCUIT CONN. (GA CLUSTER)
PRINTED CIRCUIT CONN.
TACH ONLY
GA ONLY 10±1Ω
IGN. SW. CONN.
DOME LT. & SW.
LIGHT SW. CONN.
(GR. PRIX ONLY)
STEERING COLM CONN.
(GR. AM & LE MANS)
BEAM SELECT. SW.
STOPLIGHT SW.
COURTESY LT.
GAUGE CLUSTER
LEFT DOOR SW
(LE MANS & GR. AM ONLY)