1979 General Motors

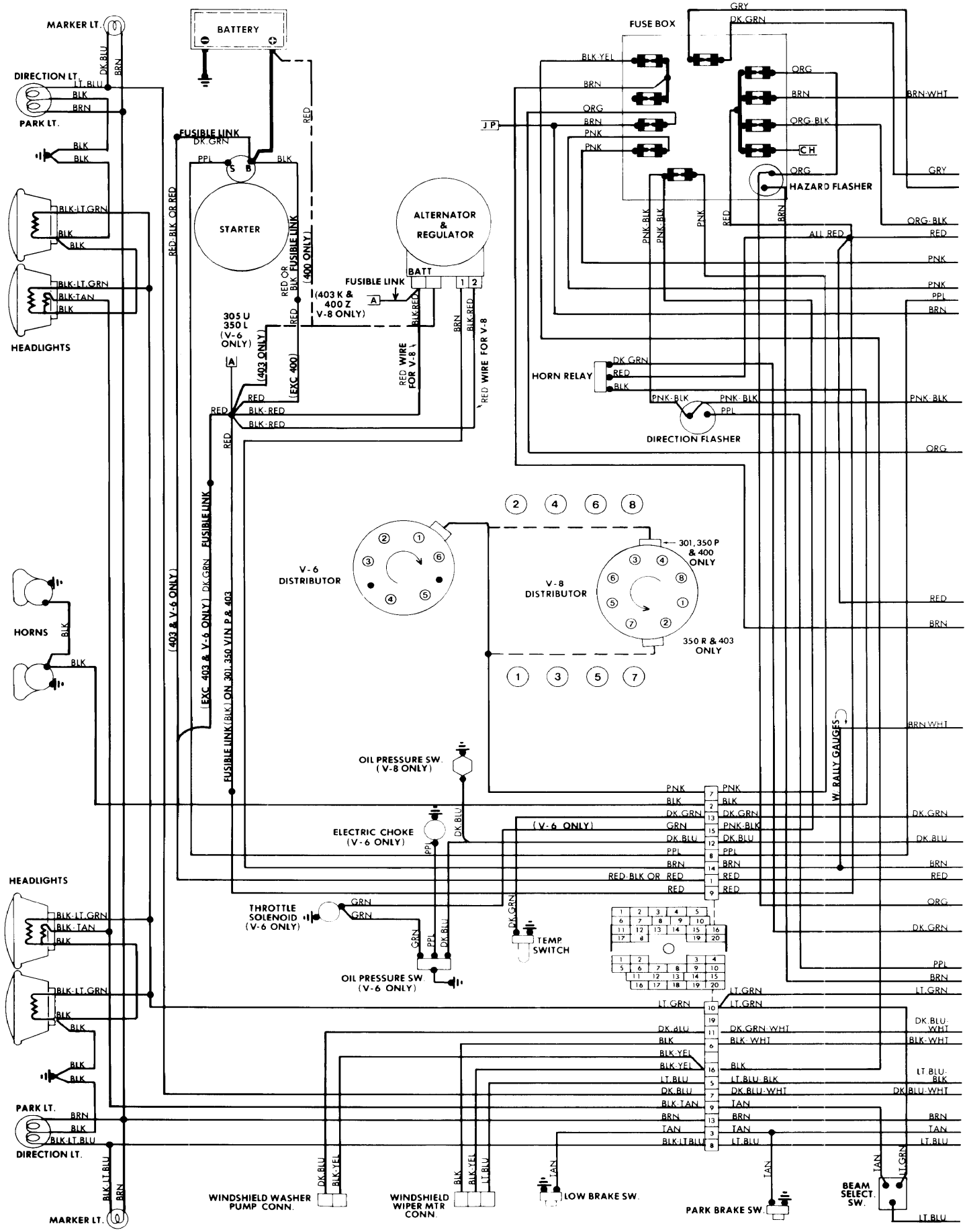

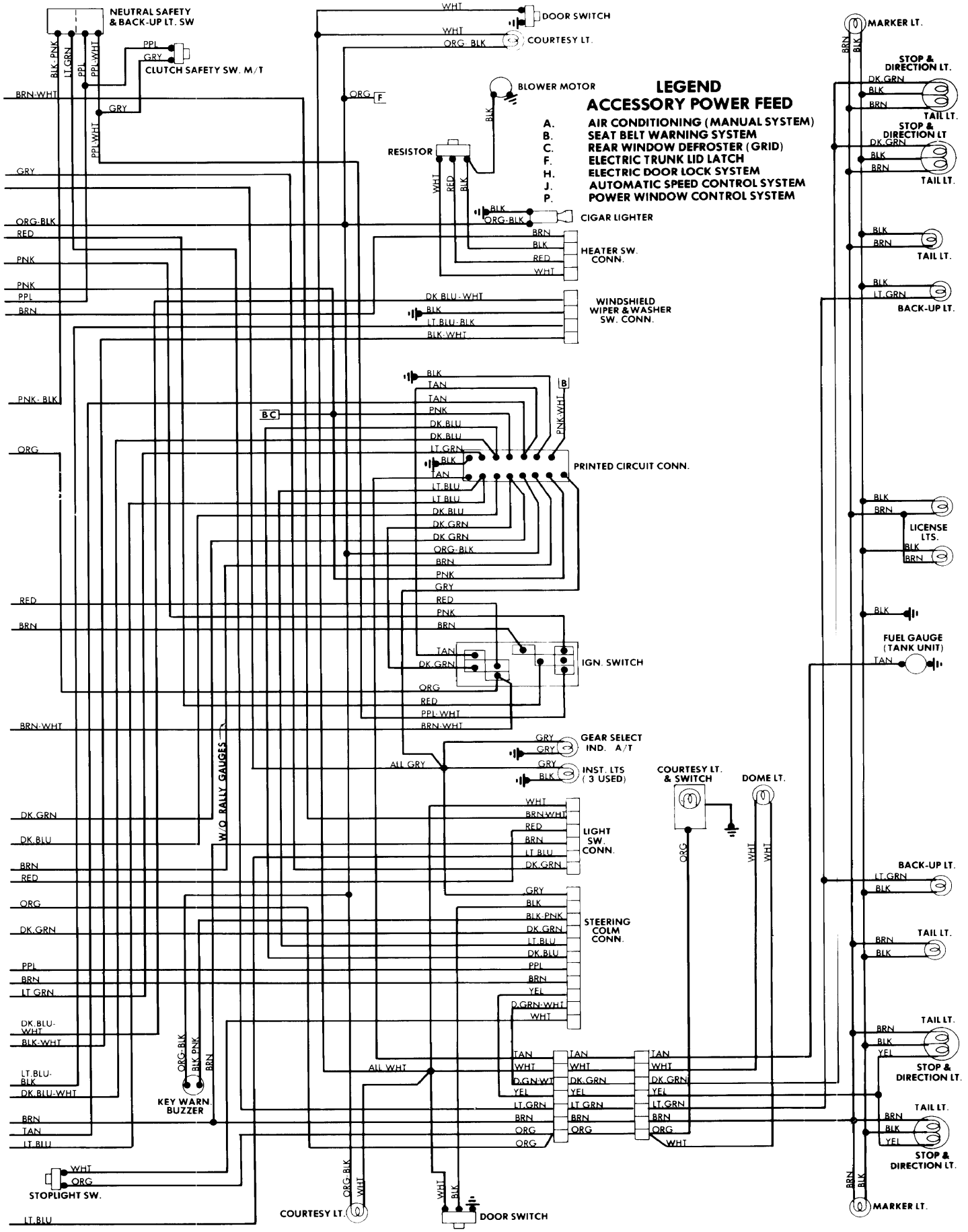
NEUTRAL SAFETY & BACK-UP LT. SW
CLUTCH SAFETY SW. M/T
DOOR SWITCH
COURTESY LT.
BLOWER MOTOR
RESISTOR
LEGEND
ACCESSORY POWER FEED
A. AIR CONDITIONING (MANUAL SYSTEM)
B. SEAT BELT WARNING SYSTEM
C. REAR WINDOW DEFROSTER (GRID)
F. ELECTRIC TRUNK LID LATCH
H. ELECTRIC DOOR LOCK SYSTEM
J. AUTOMATIC SPEED CONTROL SYSTEM
P. POWER WINDOW CONTROL SYSTEM
CIGAR LIGHTER
HEATER SW. CONN.
WINDSHIELD WIPER & WASHER SW. CONN.
PRINTED CIRCUIT CONN.
IGN. SWITCH
GEAR SELECT IND. A/T
INST. LTS (3 USED)
COURTESY LT. & SWITCH
DOME LT.
LIGHT SW. CONN.
STEERING COLM CONN.
W/O RALLY GAUGES
KEY WARN. BUZZER
STOPLIGHT SW.
COURTESY LT.
DOOR SWITCH
MARKER LT.
STOP & DIRECTION LT.
TAIL LT.
BACK-UP LT.
LICENSE LTS.
FUEL GAUGE (TANK UNIT)